VHF FM TRANSCEIVER

TK-2180

SERVICE MANUAL

KENWOOD

© 2004-6 PRINTED IN JAPAN
B51-8689-00 (N) 961

TK-2180 K **TK-2180 K2**

Does not come with antenna.
Antenna is available as an option.

CONTENTS

GENERAL 2
SYSTEM SET-UP 2
REALIGNMENT 3
DISASSEMBLY FOR REPAIR 5
CIRCUIT DESCRIPTION 7
SEMICONDUCTOR DATA 13
COMPONENTS DESCRIPTION 14
PARTS LIST 16
EXPLODED VIEW 25
PACKING 26
ADJUSTMENT 27
TERMINAL FUNCTION 39
PC BOARD
- **DISPLAY UNIT (X54-3470-XX)** 42
- **TX-RX UNIT (X57-6930-10)** 46

SCHEMATIC DIAGRAM
- **DISPLAY UNIT (X54-3470-XX)** 50
- **TX-RX UNIT (X57-6930-10)** 52

BLOCK DIAGRAM 60
LEVEL DIAGRAM 62
OPTIONAL ACCESSORIES
- **KNB-31A/32N/33L** 63
- **KSC-32** 63

SPECIFICATIONS ..... **BACK COVER**

GENERAL / SYSTEM SET-UP

INTRODUCTION

SCOPE OF THIS MANUAL

This manual is intended for use by experienced technicians familiar with similar types of commercial grade communications equipment. It contains all required service information for the equipment and is current as of the publication date. Changes which may occur after publication are covered by either Service Bulletins or Manual Revisions. These are issued as required.

ORDERING REPLACEMENT PARTS

When ordering replacement parts or equipment information, the full part identification number should be included. This applies to all parts : components, kits, or chassis. If the part number is not known, include the chassis or kit number of which it is a part, and a sufficient description of the required component for proper identification.

PERSONNEL SAFETY

The following precautions are recommended for personnel safety:

- DO NOT transmit until all RF connectors are verified secure and any open connectors are properly terminated.
- SHUT OFF and DO NOT operate this equipment near electrical blasting caps or in an explosive atmosphere.
- This equipment should be serviced by a qualified technician only.

SERVICE

This transceiver is designed for easy servicing. Refer to the schematic diagrams, printed circuit board views, and alignment procedures contained within.

SYSTEM SET-UP

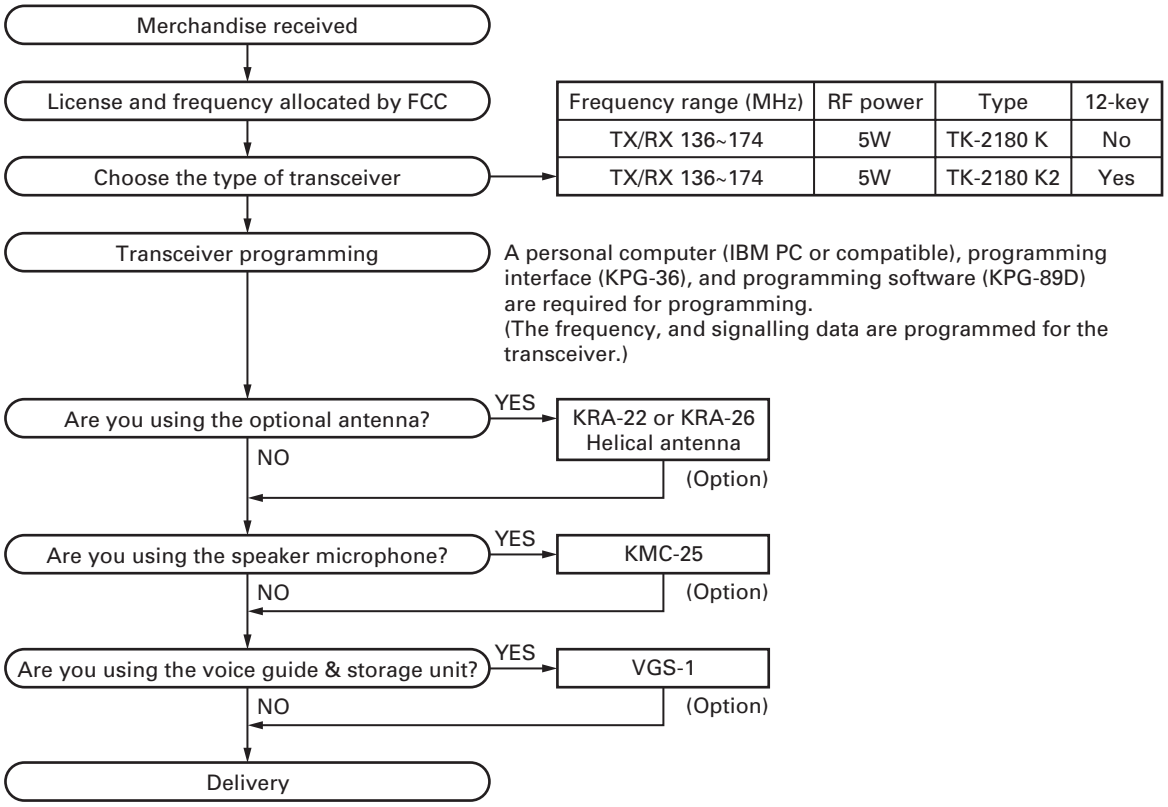

Frequency range (MHz)	RF power	Type	12-key
TX/RX 136~174	5W	TK-2180 K	No
TX/RX 136~174	5W	TK-2180 K2	Yes

REALIGNMENT

1. Modes

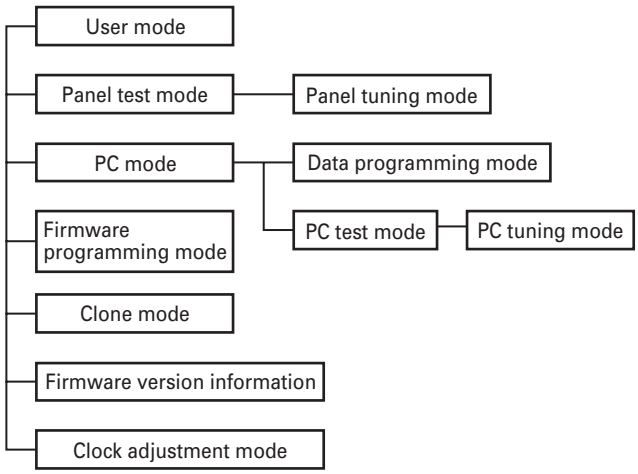

Mode	Function
User mode	For normal use.
Panel test mode	Used by the dealer to check the fundamental characteristics.
Panel tuning mode	Used by the dealer to tune the radio.
PC mode	Used for communication between the radio and PC (IBM compatible).
Data programming mode	Used to read and write frequency data and other features to and from the radio.
PC test mode	Used to check the radio using the PC. This feature is included in the FPU. See panel tuning.
Firmware programming mode	Used when changing the main program of the flash memory.
Clone mode	Used to transfer programming data from one radio to another.
Firmware version information	Used to confirm the internal firmware version.
Clock adjustment mode	Used by dealer to adjust data and time.

2. How to Enter Each Mode

Mode	Operation
User mode	Power ON
Panel test mode	[A] + Power ON
PC mode	Received commands from PC
Panel tuning mode	[Panel test mode] + [S]
Firmware programming mode	[S] + Power ON
Clone mode	[B] + Power ON
Firmware version information	[Side1] + Power ON
Clock adjustment mode	[C] + Power ON

3. Panel Test Mode

Setting method refer to ADJUSTMENT.

4. Panel Tuning Mode

Setting method refer to ADJUSTMENT.

5. PC Mode

5-1. Preface

The transceiver is programmed by using a personal computer, programming interface (KPG-36) and programming software (KPG-89D).

The programming software can be used with an IBM PC or compatible. Figure 1 shows the setup of an IBM PC for programming.

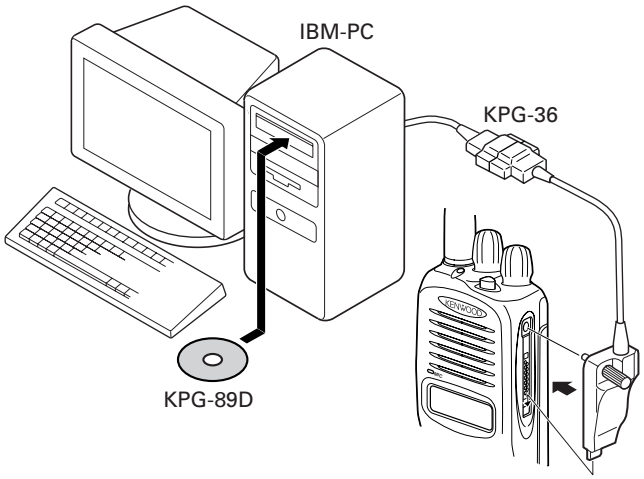

Fig. 1

REALIGNMENT

5-2. Connection procedure

1. Connect the transceiver to the personal computer with the interface cable.
2. When the POWER switch on, user mode can be entered immediately. When PC sends command the radio enter PC mode, and "PROGRAM" is displayed on the LCD.
   When data transmitting from transceiver, the red LED is lights.
   When data receiving to transceiver, the green LED is lights.

Note:

- The data stored in the personal computer must match model type, when it is written into the flash memory.

5-3. KPG-36 description (PC programming interface cable: Option)

The KPG-36 is required to interface the transceiver to the computer. It has a circuit in its D-subconnector (25-pin) case that converts the RS-232C logic level to the TTL level.

The KPG-36 connects the universal connector of the transceiver to the computers RS-232C serial port.

5-4. Programming software KPG-89D description

The KPG-89D is the programming software for the transceiver supplied on a CD-ROM. This software runs under MS-Windows 98, ME, Windows 2000 or XP on an IBM-PC or compatible machine.

The data can be input to or read from the transceiver and edited on the screen. The programmed or edited data can be printed out. It is also possible to tune the transceiver.

6. Firmware Programming Mode

6-1. Preface

Flash memory is mounted on the transceiver. This allows the transceiver to be upgraded when new features are released in the future. (For details on how to obtain the firmware, contact Customer Service.)

6-2. Connection procedure

Connect the transceiver to the personal computer (IBM PC or compatible) with the interface cable (KPG-36). (Connection is the same as in the PC Mode.)

6-3. Programming

1. Start up the firmware programming software (Fpro.exe).
2. Set the communications speed (normally, 115200 bps) and communications port in the configuration item.
3. Set the firmware to be updated by File name item.
4. Turn the transceiver power ON with the [S] switch held down. Then, the orange LED on the transceiver lights and "PROG 115200" is displayed.
5. Check the connection between the transceiver and the personal computer, and make sure that the transceiver is in the Program mode.
6. Press write button in the window. When the transceiver starts to receive data, the [PG] display is blinking.
7. If writing ends successfully, the checksum is calculated and a result is displayed.
8. If you want to continue programming other transceivers, repeat steps 4 to 7.

Notes:

- This mode cannot be entered if the Firmware Programming mode is set to Disable in the Programming software.
- When programming the firmware, it is recommend to copy the data from the floppy disk to your hard disk before update the radio firmware.
  Directly copying from the floppy disk to the radio may not work because the access speed is too slow.

6-4. Function

1. If you press the [Side2] switch (under of left side) while "PROG 115200" is displayed, the display changes to "PROG 19200" to indicate that the write speed is low speed (19200 bps). If you press the [Side2] switch again while "PROG 19200" is displayed, the display changes to "PROG 38400". If you press the [Side2] switch again while "PROG 38400" is displayed, the display changes to "PROG 57600". If you press the [Side2] switch again while "PROG 57600" is displayed, the display returns to "PROG 115200".
2. If you press the [Side1] switch (top of left side) while "PROG 115200" is displayed, the checksum is calculated, and a result is displayed. If you press the [Side1] switch again while the checksum is displayed, "PROG 115200" is redisplayed.

Note:

Normally, write in the high-speed mode.

7. Clone Mode

Programming data can be transferred from one radio to another by connecting them via their external universal connectors. The operation is as follows (the transmit radio is the master and the receive radio is a slave).

The "password" of description by explanation of 1. to 7. are "Read Authorization Password".

1. Turn the master transceiver power ON with the [B] key held down. If the Data password is set to the transceiver, the transceiver displays "CLONE LOCK". If the password is not set, the transceiver displays "CLONE MODE".
2. When you enter the correct password, and "CLONE MODE" is displayed, the transceiver can be used as the cloning master. The following describes how to enter the password.

REALIGNMENT / DISASSEMBLY FOR REPAIR

3. How to enter the password with the keypad;
   If you press a key while "CLONE LOCK" is displayed, the number that was pressed is displayed on the transceiver. Each press of the key shifts the display in order to the left. When you enter the password and press the [✳] or [S] key, "CLONE MODE" is displayed if the entered password is correct. If the password is incorrect, "CLONE LOCK" is redisplayed.
   How to enter the password with the encoder;
   If the encoder is rotated while "CLONE LOCK" is displayed, numbers (0 to 9) are displayed flashing. When you press the [C] key, the currently selected number is determined. If you press the [S] key after entering the password in this procedure, "CLONE MODE" is displayed if the entered password is correct. If the password is incorrect, "CLONE LOCK" is redisplayed.
4. Power on the slave transceiver.
5. Connect the cloning cable (part No. E30-3325-05) to the universal connectors on the master and slave.
6. Press the [S] key on the master while the master displays "CLONE MODE". The data of the master is sent to the slave. While the slave is receiving the data, "PROGRAM" is displayed. When cloning of data is completed, the master displays "END", and the slave automatically operates in the User mode. The slave can then be operated by the same program as the master.
7. The other slave can be continuously cloned. When the [S] key on the master is pressed while the master displays "END", the master displays "CLONE MODE". Carry out the operation in step 4 to 6.

Notes:

Can not be cloned if the password (over write password) is programmed to the slave.
Only the same models can be cloned together.

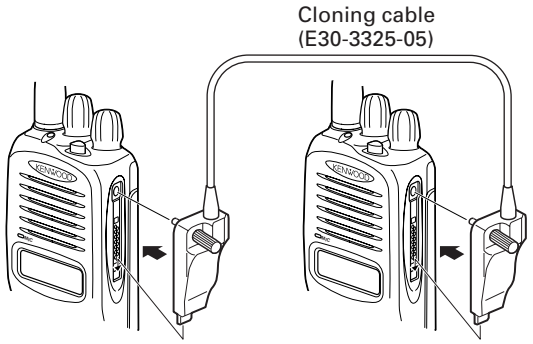

Fig. 2

8. Firmware Information Mode

Turn the transceiver ON with the [Side1] switch held down. Then, the version is displayed during holding the [Side1] switch.

9. Clock Adjustment Mode

9-1. Flow chart of operation

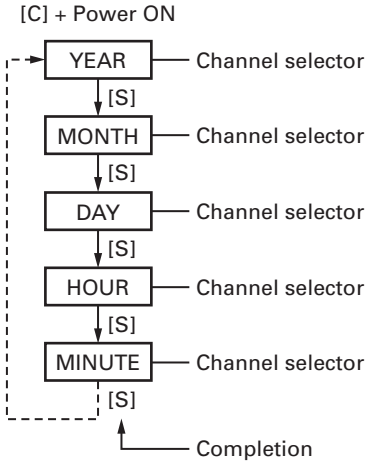

DISASSEMBLY FOR REPAIR

1. How to Attach the Rubber Spacer

1) Press the rubber spacer with fingers and insert it between the rubber spacer and the rear panel without crevice.

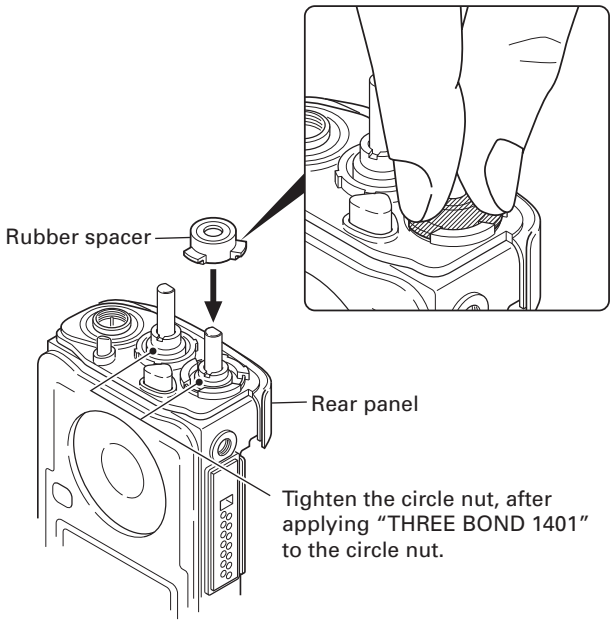

DISASSEMBLY FOR REPAIR

2. How to Stick the Sheet (G11-4326-04)

1) Remove the white separation paper of the sheet first (①) and stick the sheet on the front-glass (②).
   Next, remove the transparent separation paper of the sheet (③).

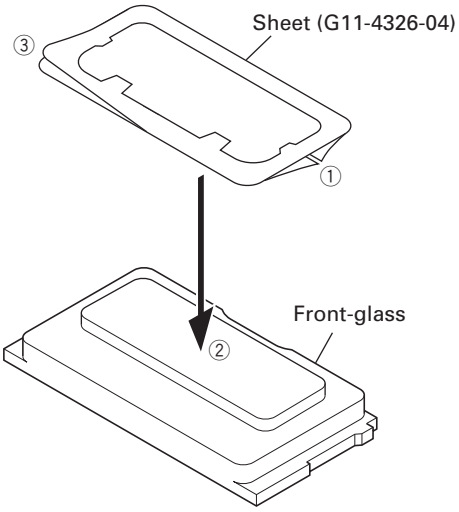

3. How to Attach the TX-RX Unit

1) In order to attach the TX-RX unit in chassis, don't put in the TX-RX unit aslant.
   Please level the chassis and the TX-RX unit and attach them.

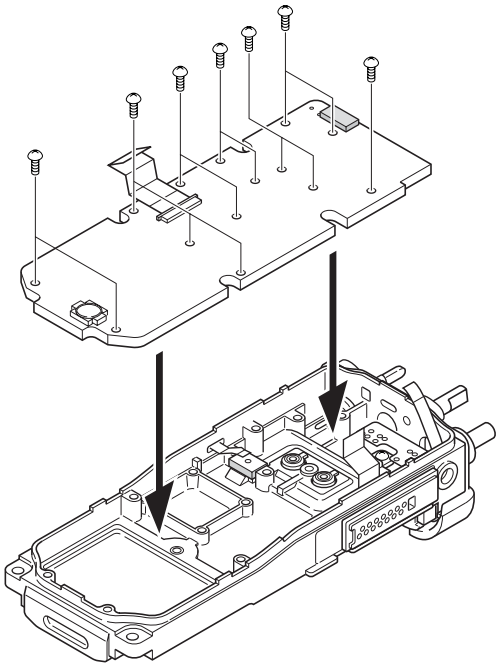

4. How to Attach the VGS-1

1) Remove the 2 screws.
2) The tip of tweezers is put into the screw hole of the cover and is pried, the cover will remove.
3) Use the 2 rubber cushions and attach them to the VGS-1.
4) Plug the VGS-1 into the VGS-1 connector of the PC board, pressing down on the top of the VGS-1 until secure.
5) The spacer turns the adhesive surface down. Next, push between the chassis and VGS-1.
6) Replace the cover and tighten the 2 screws.

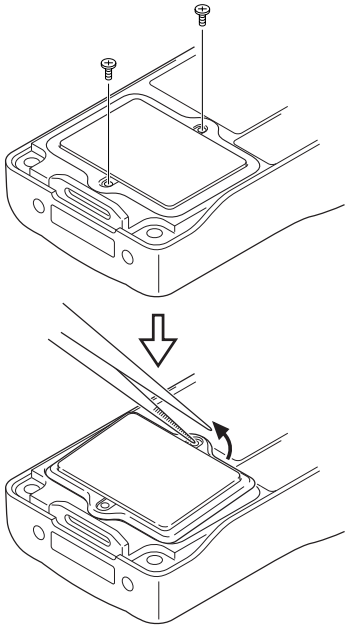

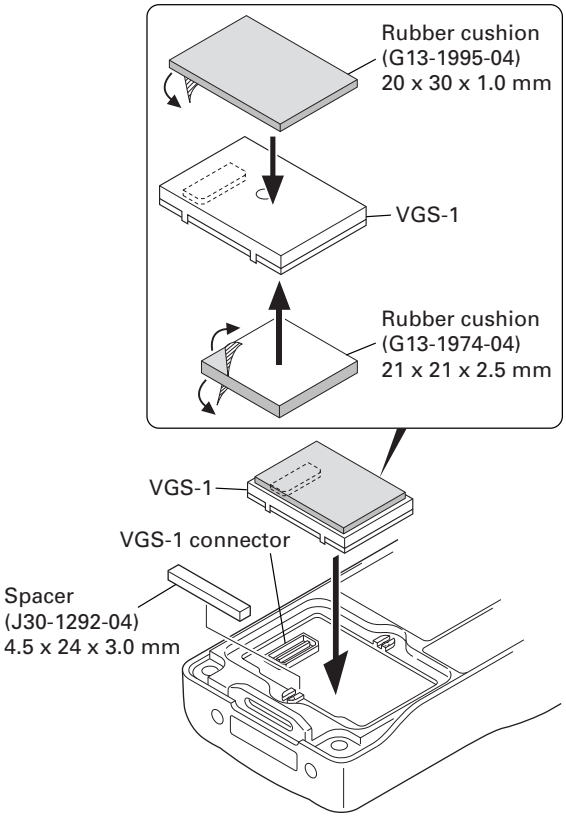

CIRCUIT DESCRIPTION

1. Overview

This transceiver is VHF/FM portable transceiver designed to operate in the frequency range of 136 to 174MHz.

2. Circuit Configuration by Frequency

The receiver is a double-conversion superheterodyne with a first intermediate frequency (IF) of 59.85MHz and a second IF of 455kHz. Incoming signals from the antenna are mixed with the local signal from the PLL to produce the first IF of 59.85MHz.

This is then mixed with the 59.395MHz second local oscillator output to produce the 455kHz second IF. This is detected to give the demodulated signal.

The transmit signal frequency is generated by the PLL VCO, and modulated by the signal from the microphone. It is then amplified and sent to the antenna.

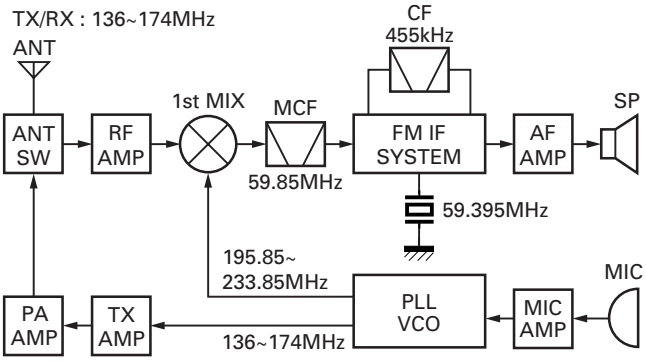

Fig. 1 Frequency configuration

3. Receiver System

3-1. RF unit

An incoming RF signal from the antenna terminal is passed through the antenna switch (D106, D107, D211 and D213 are off) and then the bandpass filter (L215, L216). The bandpass filter is adjusted by a variable capacitor. The input voltage to the variable capacitor is regulated by the voltage output from the D/A converter (IC605). The signal is amplified by RF amplifier (Q207), and passed through the bandpass filter (L211, L214).

The resulting signal is applied to the first mixer (Q206), where it is mixed with the first local oscillator signal output from the frequency synthesizer to produce the first IF (59.85MHz).

3-2. IF unit

The first IF signal is passed through a four-pole monolithic crystal filter (XF200) to remove a adjacent channel signal. The filtered first IF signal is amplified by the first IF amplifier (Q205) and then applied to the IF system IC (IC200). The IF system IC provides a second mixer, second local oscillator, limiting amplifier, quadrature detector and RSSI (Received Signal Strength Indicator). The second mixer mixes the first IF signal with the 59.395MHz of second local oscillator output (crystal unit X200) and produces the second IF signal of 455kHz.

The second IF signal is passed through the ceramic filter (CF201 : Wide, CF200 : Narrow) to more remove the adjacent channel signal. The filtered second IF signal is amplified by the limiting amplifier and demodulated by the quadrature detector with ceramic discriminator (CD200). The demodulated signal is routed to the audio circuit.

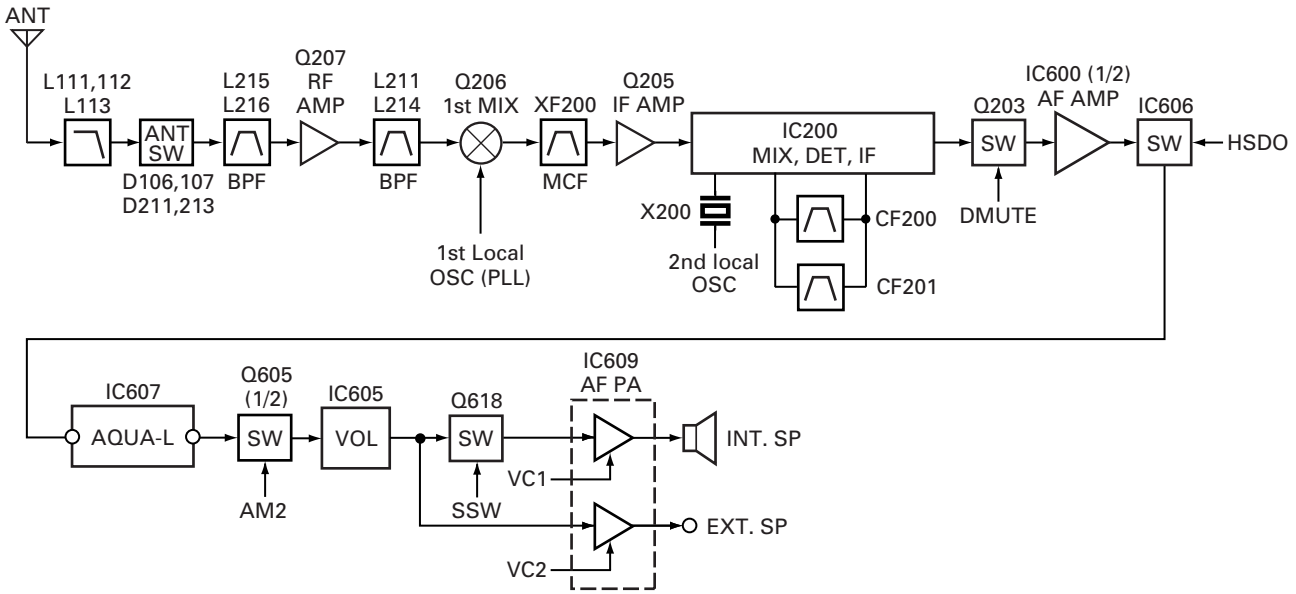

Fig. 2 Receiver section

CIRCUIT DESCRIPTION

3-3. Wide/Narrow switching circuit

Wide and Narrow settings can be made for each channel by switching the ceramic filters CF201 (Wide), CF200 (Narrow). The Wide (low level) and Narrow (high level) is output from IC502.

When a Wide (low level) is selected, Q200 (N-ch) turn off and Q200 (P-ch) turn on. When a Narrow (high level) is selected, Q200 (N-ch) turn on and Q200 (P-ch) turn off. D201 and D203 are switched to ceramic filters when a high/low level is selected.

Q204 turns on/off with the Wide/Narrow and the IC200 detector output level is changed to maintain a constant output level during wide or narrow signals.

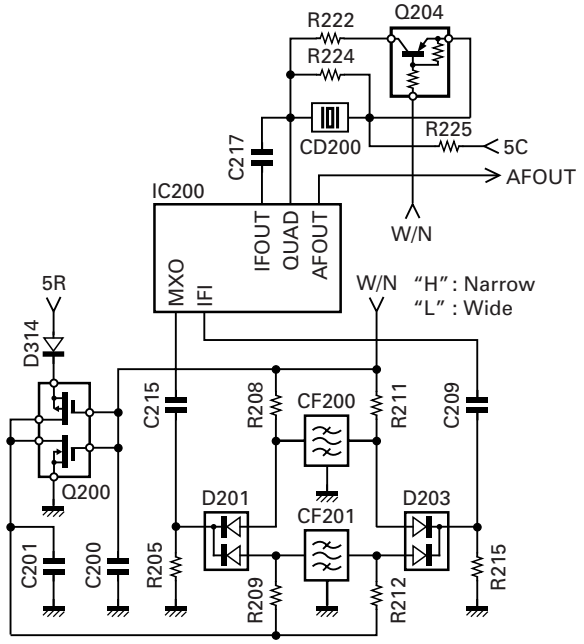

Fig. 3 Wide/Narrow switching circuit

3-4. Audio amplifier circuit

The demodulated signal from IC200 goes through the mute switch (Q203), IC600 (1/2) and IC606, high-pass filtered, low-pass filtered, high-pass filtered and de-emphasized by IC607.

The signal then goes through mute switch (Q605 1/2), and an electronic volume control (IC605), and an AF switch (Q618 is on), and is routed to audio power amplifier (IC609), where it is amplified and output to the internal speaker.

The audio mute signal (AM1) from the IC502 becomes Low in the standby and Q612, Q613 which are power supply circuit for IC609 turn off. Also, the audio mute signal (AM2) becomes High to turn Q605 (1/2) off. When the audio is output, AM1 becomes High to turn Q612, Q613 on, and voltage is supplied to power terminal VP of IC609. Also, AM2 becomes Low to turn Q605 (1/2) on.

The speaker is switched by the logic of speaker switching terminal SSW on the universal connector. When SP-MIC is not attached, the logic of SSW becomes High and SW (Q618) is turned on, and the AF signal is input to both amplifiers of IC609.

When SP-MIC is attached, SSW is connected to GND at inside of SP-MIC. For this reason, Q618 is turned off, and the AF signal is input only to amplifier for EXT SP of IC609.

Change of INT/EXT SP refer to Fig. 4.

AM1	AM2	SSW	VC1	VC2	SP
H	L	H	H	L	INT
H	L	L	L	H	EXT
L	H	H	L	L	MUTE
L	H	L	L	L	MUTE

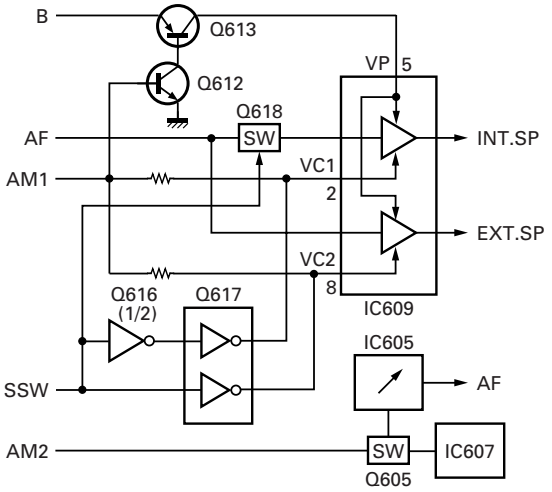

Fig. 4 Audio amplifier circuit

3-5. Squelch circuit

The output from IC200 enters FM IC again, then passed through a bandpass filter. The noise component output from IC200 is amplified by Q201 and rectified by D202 to produce a DC voltage corresponding to the noise level. The DC voltage is sent to the analog port of the CPU (IC502). And IC200 outputs a DC voltage (RSSI) corresponding to the input of the IF amplifier. The CPU reads the RSSI signal via pin 125.

IC502 determines whether to output sounds from the speaker by comparing the input voltage of pin 124 and pin 125 with the preset value.

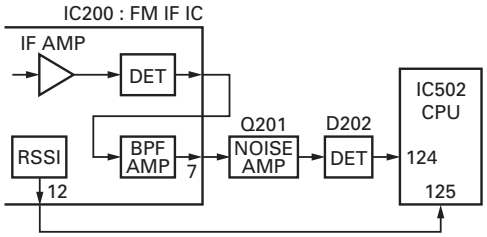

Fig. 5 Squelch circuit

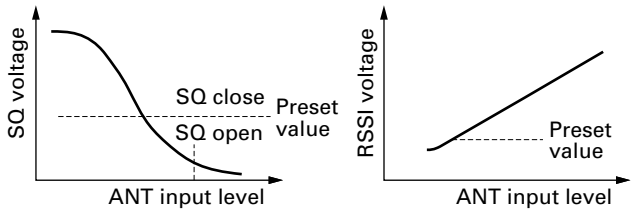

Fig. 6 Squelch and RSSI voltage vs ANT input level

CIRCUIT DESCRIPTION

4. Transmitter System

4-1. Microphone amplifier

The signal from the internal microphone goes through the mute switch (Q614).

When the SP-MIC is not attached, the microphone switching terminal (MSW) on the universal connector becomes High, and mute switch (Q614) is turned on. When the SP-MIC is attached, MSW is connected to GND at inside of SP-MIC. For this reason, Q614 is turned off, the internal microphone is muted, and only the input of the external microphone is supplied to the microphone amplifier.

The signal from microphone goes through D/A converter (IC605), mute switch (Q610), and amplified by IC608 (1/2) and limited by AGC circuit composed of D601, D602, Q606 and Q607. IC607 is composed of high-pass filter, low-pass filter and pre-emphasis/IDC circuit.

The signal passes through the D/A converter (IC605) for the maximum deviation adjustment, and enters the summing amplifier consisting of IC600 (2/2), and is mixed with the low speed data from the CPU (IC502).

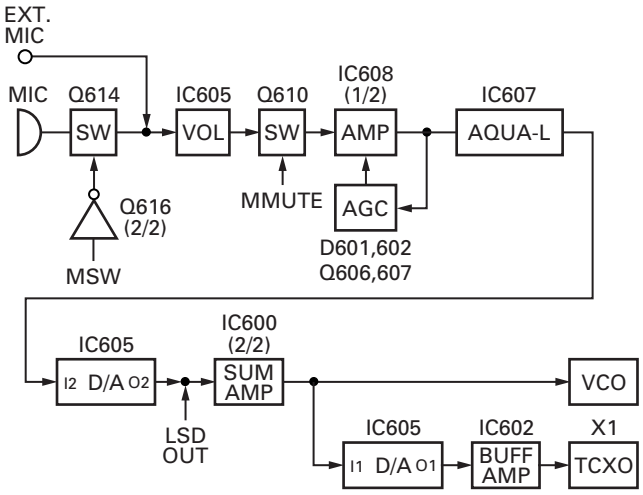

Fig. 7 Microphone amplifier

The output signal from the summing amplifier goes to the VCO modulation input. The other output signal from the summing amplifier passes through the D/A converter (IC605) again for the BAL adjustment, and the buffer amplifier (IC602), and goes to the TCXO modulation input.

4-2. VOX

The IC608 (2/2) amplify the audio signal captured in the microphone, and then the signal is converted into the DC voltage D603 rectifies.

The DC voltage activates the CPU (IC502), and the VOX starts.

4-3. Drive and Final amplifier

The signal from the T/R switch (D100 is on) is amplified by drive amplifier (Q101 and Q102) to +15~17dBm.

The output of the drive amplifier is amplified by the RF power amplifier (Q105) to 5.0W (1W when the power is low). The RF power amplifier is MOS FET. The output of the RF power amplifier is then passed through the harmonic filter (LPF) and antenna switch (D106, D107 are on) and applied to the antenna terminal.

4-4. APC circuit

The APC circuit always monitors the current flowing through the RF power amplifier (Q105) and keeps a constant current. The voltage drop at R125, R127 and R130 is caused by the current flowing through the RF power amplifier and this voltage is applied to the differential amplifier (IC100 1/2).

IC100 (2/2) compares the output voltage of IC100 (1/2) with the reference voltage from IC502, and the output of IC100 (2/2) controls the VGG of Q101, Q102 and Q105 to make the both voltages to same voltage.

The change of power high/low is carried out by the change of the reference voltage. Q106, Q107 and Q108 are turned on and Q104 is turned off in transmit and the APC circuit is active.

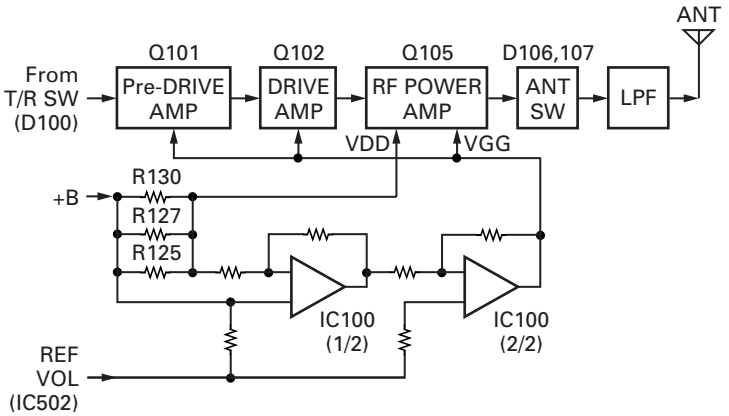

Fig. 8 Drive and final amplifier and APC circuit

CIRCUIT DESCRIPTION

5. Frequency Synthesizer Unit

5-1. Frequency synthesizer

The frequency synthesizer consists of the TCXO (X1), VCO, PLL IC (IC1) and buffer amplifiers.

The TCXO generates 16.8MHz. The frequency stability is 2.5ppm within the temperature range of –30 to +60°C. The frequency tuning and modulation of the TCXO are done to apply a voltage to pin 1 of the TCXO. The output of the TCXO is applied to pin 8 of the PLL IC.

The VCO consists of 2VCO and covers a dual range of the 195.85~233.85MHz and the 136~174MHz. The VCO generates 195.85~233.85MHz for providing to the first local signal in receive. The operating frequency is generated by Q7 in transmit mode and Q6 in receive mode. The oscillator frequency is controlled by applying the VCO control voltage, obtained from the phase comparator (IC1) to the variable capacitor diodes (D5, D7, D10 and D11 in transmit mode and D9 and D13 in receive mode).

The T/R pin of IC502 goes "high" in receive mode causing Q8 and Q7 to turn off, and Q6 turn on. The T/R pin goes "low" in transmit mode.

The outputs from Q6 and Q7 are amplified by buffer amplifier (Q10) and doubled by Q2 and then sent to PLL IC.

The PLL IC consists of a prescaler, reference divider, phase comparator, charge pump (The frequency step of the PLL circuit is 10 or 12.5kHz). The input signal from the pins 8 and 5 of the PLL IC is divided down to the 10 or 12.5kHz and compared at phase comparator. The pulsed output signal of the phase comparator is applied to the charge pump and transformed into DC signal in the loop filter (LPF). The DC signal is applied to the CV of the VCO and locked to keep the VCO frequency constant.

PLL data is output from DT (pin 112), PCK (pin 82) and PLE (pin 81) of the microprocessor (IC502). The data are input to the PLL IC when the channel is changed or when transmission is changed to reception and vice versa. A PLL lock condition is always monitored by the pin 80 (UL) of the microprocessor. When the PLL is unlocked, the UL goes low.

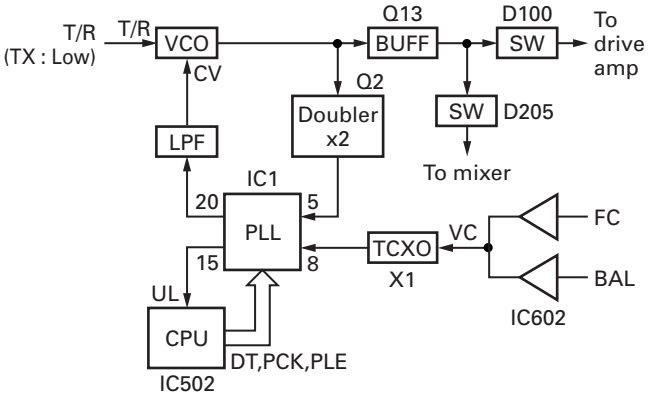

Fig. 9 PLL block diagram

6. Control Circuit

The control circuit consists of microprocessor (IC502) and its peripheral circuits. It controls the TX-RX unit and transfers data to the Display unit. IC502 mainly performs the following;

1) Switching between transmission and reception by PTT signal input.
2) Reading system, zone, frequency, and program data from the memory circuit.
3) Sending frequency program data to the PLL.
4) Controlling squelch on/off by the DC voltage from the squelch circuit.
5) Controlling the audio mute circuit by decode data input.
6) Transmitting tone and encode data.

6-1. Memory circuit

Memory circuit consists of the CPU (IC502) and a flash memory (IC500). A flash memory has a capacity of 4M bits and contains the transceiver control program for the CPU. It also stores the data for transceiver channels and operating parameter that are written by the FPU. This program can be easily written from an external devices.

The EEPROM (IC504) stores the last channel data, the scan on status, and other parameters.

■ Flash memory

Note : The flash memory stores the data that is written by the FPU (KPG-89D), and firmware program (User mode, Test mode, Tuning mode, etc.). This data must be rewritten when replacing the flash memory.

■ EEPROM

Note : The EEPROM stores tuning data (Deviation, Squelch, etc.).
Realign the transceiver after replacing the EEPROM.

■ Real-time cock

The clock function is based on real-time clock IC (IC503). When the power supply is off, it is backed up by an internal secondary lithium battery

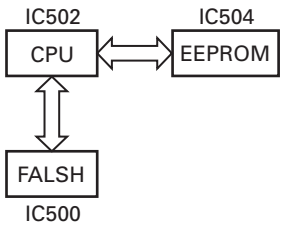

Fig. 10 Memory circuit

CIRCUIT DESCRIPTION

6-2. Low battery warning

The battery voltage is monitored by the microprocessor (IC502 pin 126 : BATTLVL). When the battery voltage falls below the voltage set by the Low Battery Warning adjustment during the transmission, the red LED blinks to notify the operator that it is time to replace the battery (When the "On TX" option (default setting) under the Battery Warning / status function in the FPU is selected.). If the battery voltage falls below 5.8V, the transceiver does not transmit and the warning tone beeps while the PTT switch is pressed.

Low battery warning	Battery condition
The red LED blinks during the transmission.	The battery voltage is low but the transceiver is still usable.
The red LED blinks and the warning tone beeps while the PTT switch is pressed.	The battery voltage is low and the transceiver is not usable to make calls.

6-3. Battery type detection

The transceiver automatically detects the battery type, measuring the resistance between the S-terminal and GND terminal on the battery pack and changes the supplied voltage to the S-terminal as below. The microprocessor then detects the battery type.

Resistor value	Battery type	Input voltage of S-terminal
Open	Ni-Cd	4.5~5.0V
150kΩ	Ni-MH	2.0~3.34V
47kΩ	Li-ion	0.8~2.0V
Short	Battery case	0~0.8V

6-4. Key input

When any key is pressed, KI1 or KI2 become Low. And CPU (IC502) set Q1 to Q9 "Low" sequentially. The CPU detects which key is pressed, according to the voltage of KI1 and KI2 and Q1 to Q9 timing.

7. Signaling Circuit

7-1. Encode

■ Low-speed data (QT, DQT, LTR)

Low-speed data is output from pin 33 of the CPU. The signal passes through a low-pass filter (IC601 1/2), and goes to the summing amplifier (IC600 2/2). The signal is mixed with the audio signal and goes to the VCO and TCXO (X1) modulation input after passing through the D/A converter (IC605) for BAL adjustment.

■ High-speed data (2-tone, 5-tone, DTMF)

High-speed data (HSD) is output from pin 7 of the CPU. The signal passes through a low-pass CR filter and provides a TX HSD tone and a RX HSD tone. TX HSD deviation making an adjustment by microprocessor is passed through the switch (IC606) and then applied to the audio processor (IC607).

The signal is mixed with the audio signal and goes to the VCO and TCXO. The RX HSD tone is passed a summing amplifier (IC607). The D/A converter (IC605) for audio control, audio power amplifier and then to the speaker.

■ MSK

MSK signal is output from pin 6 of IC607. The signal passes through the D/A converter (IC605) for the MSK deviation adjustment, and is routed to the VCO. When encoding MSK, the microphone input signal is muted.

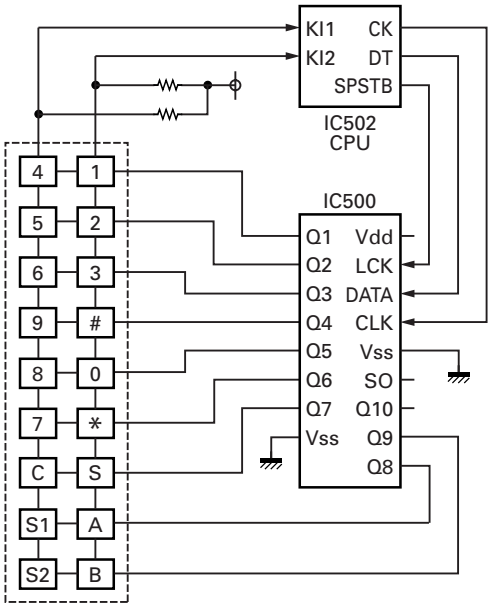

Fig. 11 Key input

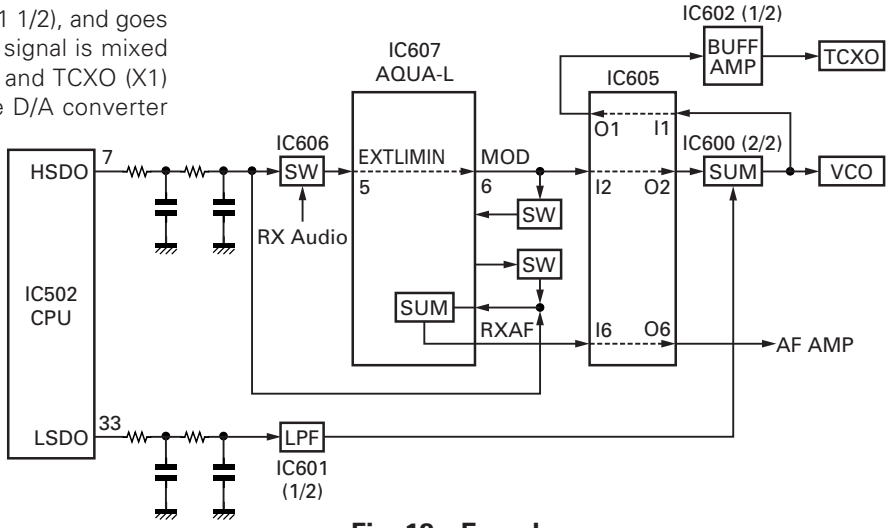

Fig. 12 Encode

CIRCUIT DESCRIPTION

7-2. Decode

■ Low-speed data (QT, DQT, LTR)

The demodulated signal from the IF IC (IC200) is amplified by IC600 (1/2) and passes through a low-pass filter (IC607) to remove audio components. The signal is input to pin 128 of the CPU.

The CPU digitizes this signal, performs processing such as DC restoration, and decodes the signal.

■ High-speed data (DTMF)

The DTMF input signal from the IF IC (IC200) is amplified by IC600 (1/2) and goes to IC607, the DTMF decoder. The decoded information is then processed by the CPU. During transmission and standby, the DTMF IC is set to the power down mode.

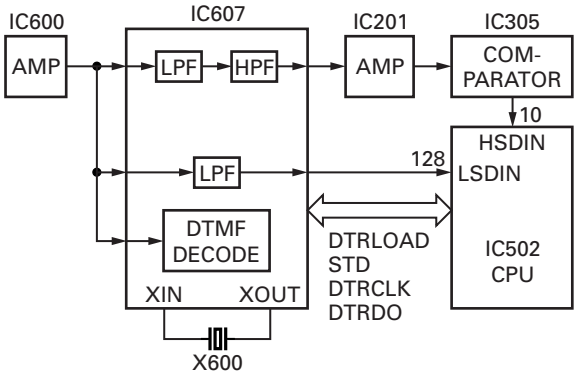

Fig. 13 Decode

■ High-speed data (2-tone, 5-tone)

The demodulated signal from the IF IC (IC200) is amplified by IC600 (1/2) and passes through an audio processor (IC607) and amplifier IC604 (1/2) and comparator IC604 (2/2) to remove a low-speed data. The CPU digitizes this signal and decodes the signal.

■ MSK

The MSK input signal from the IF IC is amplified by IC600 (1/ 2) and goes to pin 5 of IC607. The signal is demodulated by MSK demodulator in IC607. The demodulated data goes to the CPU for processing.

8. Power Supply Circuit

Battery +B is supplied via a 3A fuse from the battery terminal connected to the TX-RX unit. Power supply (+B) is applied to the four AVRs. IC402 supplies 5V (5M) to the control circuit. IC401 and IC403 supplies 5V to common circuits. IC406 supplies to the TX circuit, the RX circuit and common circuits. During transmission, 5TC becomes Low and Q406 is turned on to supply 5V (5T) to the TX circuit. During reception, 5RC becomes Low and Q405 is turned on to supply 5V (5R) to the RX circuit.

The power supply voltage monitor IC (IC400) monitors power supply voltage (+B). If the voltage falls (less than 5.6V), the VOUT port goes "LOW" level, the CPU INT port also goes "HIGH" level, and the CPU stops.

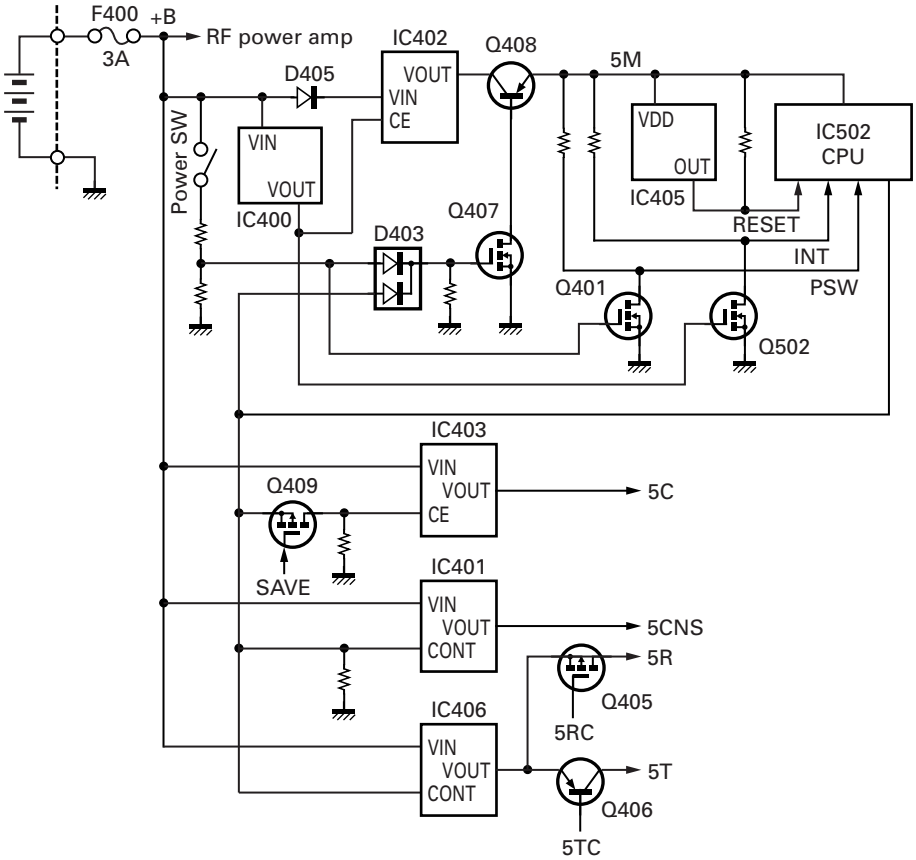

Fig. 14 Power supply circuit

SEMICONDUCTOR DATA

Microprocesser : M30625MGP (TX-RX unit IC502)

Pin No.	Port Name	I/O	Function
1	VREF	-	+5V
2	AVCC	-	+5V
3	SBC	O	Switched B control
4	5RC	O	RX control
5	5TC	O	TX control
6	APC/TV2	O	TX APC adjust / TV adjust 2
7	HSDO	O	High speed data output
8	STSW	O	Side tone switch
9	RTCL/EEPCL	O	RTC/EEPROM clock
10	HSDIN	I	High speed data input
11	MAN-DN IN	I	Man down switch input
12	RTDT/EEPDAT	I/O	RTC/EEPROM data
13	BYTE	-	+5V
14	CNVSS	-	DGND (Vss)
15	DMUTE	O	Det mute
16	AM2	O	Audio mute 2
17	RST	I	Reset
18	Xout	O	11.0592MHz clock output
19	DGND	-	DGND (Vss)
20	Xin	I	11.0592MHz clock input
21	VCC1	-	+5V
22	NMI	-	+5V
23	PSW	I	Power switch input
24	INT	I	BATT voltage INT
25	INTRA	I	RTC INT
26	SHIFT/MODEL	I/O	Beat shift / Model select
27	BEEP	O	Beep out
28	SPSTB	O	BU2099 storage enable
29	VCO ADJ	O	VCO adjust switch
30	LEDR	O	LED red
31	LEDG	O	LED green
32	DSTB	O	STB for DAC
33	LSDO	O	Low speed data output
34	KEY1	I	Key matrix 1 input
35	KEY2	I	Key matrix 2 input
36	TXD1	I/O	TXD1 and PTT (SC20-460)
37	Vcc1	-	+5V
38	RXD1	I	RXD1
39	DGND	-	DGND (Vss)

Pin No.	Port Name	I/O	Function
40	MMUTE	O	Mic mute
41	AUX	I	AUX key
42	TXD	O	TXD (COM0)
43	RXD	I	RXD (COM0)
44	AFDAT	O	BB TDATA and DTRCLK
45	AFDIO	I/O	BB DI/O
46	AFDIR	O	BB DIR
47	DTRLOAD	O	BB DTMF enable
48	AFSTD	I	BB STD
49	LSW	O	BB LIM switch
50	RDY	-	+5V
51	NC	-	Non connection
52	HOLD	-	+5V
53	NC	-	Non connection
54~57	EN4~EN1	I	Encoder in 4~1
58	NC	O	Non connection
59	RD	O	Read (RD)
60	NC	O	Non connection
61	WR	O	Write (WR)
62	APCSW	O	APC switch output
63	DSW	O	APC voltage discharge switch
64	5UC	O	5U control
65	BTSE/VOX	O	BATT select / VOX input switch
66	LCDRST	O	LCD reset
67	LCDCS	O	LCD chip select
68	CS0	O	Chip select 0
69	NC	-	-
70~79	A18~A9	O	Address bus 18~9
80	UL	I	PLL unlock
81	PLE	O	PLL enable
82	PCK	O	PLL clock
83	NC	-	NC
84	OPT6	O	Option board I/F 6
85	VCC2	-	+5V
86	A8	O	Address bus 8
87	DGND	-	DGND (Vss)
88~95	A7~A0	O	Address bus 7~0
96	PTT	I	PTT input
97	AFRTM	I	BB RDF/FD

SEMICONDUCTOR DATA / COMPONENTS DESCRIPTION

Pin No.	Port Name	I/O	Function
98	TCLK/DTRDO	I	BB TCLK and DTRDO
99	SAVE	O	Save
100	T/R	O	TX/RX switch
101	AM1	O	AF PA switch
102	LCDRS	O	LCDRS
103	SSW	I	EXT/INT SP switch input
104~111	D7~D0	I/O	Data bus 7~0
112	DT	O	Serial data
113	CK	O	Serial clock
114	W/N	O	Wide/Narrow switch
115~119	OPT 1~OPT 5	I/O	Option boad I/F 1~5
120	BATTSEL/VOX	I	BATT select and VOX input
121	THP/VCO ADJ	I	Thermal detect and VCO adjust
122	VOL	I	Volume level input
123	PF	I	PF key in
124	ASQ	I	RX Analog SQ. input
125	RSSI	I	RX RSSI input
126	BATT LVL	I	BATT level
127	AGND	-	DGND (Vss)
128	LSDIN	I	Low speed data input

Key Processor
: BU2099FV (Display unit IC500)

Pin No.	Port Name	I/O	Function
1	Vss	-	GND
2	NC	-	
3	DATA	I	Serial data input
4	CLK	I	Serial clock input
5	LCK	I	Storage enable input
6	Q0	O	LCD back light control
7~15	Q1~Q9	O	Key matrix output
16	Q10	O	NC
17	Q11	O	NC
18	SO	O	NC
19	OE	I	/LCDRST
20	VDD	I	5V

Display unit (X54-3470-XX)

Ref. No.	Part name	Description
IC500	IC	Key processor
IC501	IC	Voltage regulator / LCD
IC502,503	IC	LCD control
Q501,502	Transistor	Back light control
Q504	FET	LCD reset
Q505	FET	Contrast control
D500	Diode	Contrast control
D501,502	LED	Key back light (TK-2180-K2 only)
D511~514	LED	Key back light (TK-2180-K2 only)
D515~520	LED	Key back light
D522	Diode	Key control

TX-RX unit (X57-6930-10)

Ref. No.	Part name	Description
IC1	IC	PLL system
IC100	IC	Comparator (APC)
IC200	IC	FM IF system
IC400	IC	Voltage detector / INT
IC401~403	IC	Voltage regulator / 5V
IC404	IC	5T control
IC405	IC	Voltage detector / Reset
IC406	IC	Voltage regulator / 5V
IC500	IC	Flash memory
IC502	IC	Microprocessor
IC503	IC	RTC processor
IC504	IC	EEPROM
IC505	IC	Selector
IC600	IC	AF buffer
IC601	IC	LSD LPF / V REF
IC602	IC	LSD buffer to TCXO
IC603	IC	Tune
IC604	IC	HSD BPF / HSD COMP
IC605	IC	D/A converter
IC606	IC	AF switch
IC607	IC	AQUA-L
IC608	IC	MIC AMP / VOX
IC609	IC	AF power AMP
Q1	Transistor	Fin filter shift switch
Q2	Transistor	PLL IC f_in AMP
Q6	FET	VCO / RX
Q7	FET	VCO / TX
Q8	FET	DC switch / TX VCO
Q9	FET	DC switch / RX VCO
Q10	Transistor	RF buffer AMP

COMPONENTS DESCRIPTION

Ref. No.	Part name	Description
Q11	Transistor	Ripple filter
Q12	FET	DC switch / RX VCO
Q13	Transistor	RF AMP
Q14	Transistor	Fin filter shift switch
Q101	FET	Pre-drive AMP
Q102	FET	TX drive AMP
Q104	Transistor	APC switch
Q105	FET	TX final AMP
Q106	Transistor	APC switch
Q107,108	FET	APC switch
Q200	FET	W/N filter shift switch
Q201	Transistor	SQL noise AMP
Q202	FET	W/N noise switch
Q203	FET	AF mute
Q204	Transistor	W/N switch / RX
Q205	Transistor	IF AMP
Q206	FET	Mixer
Q207	FET	RF AMP
Q400	Transistor	LED switch / Green or Red
Q401	FET	Power switch
Q402	FET	SBC switch
Q403	Transistor	SB2 switch
Q404	Transistor	5R switch
Q405	FET	5R switch
Q406	Transistor	5T switch
Q407	FET	5M switch
Q408	Transistor	5M switch
Q409	FET	SAVE switch
Q502	FET	INT switch
Q602	Transistor	LIMIT switch
Q605	Transistor	AF switch
Q606,607	Transistor	MIC AGC
Q608	FET	AF switch
Q609	FET	OP switch
Q610	FET	MMUTE switch
Q611	FET	OP switch
Q612,613	Transistor	SP control
Q614	FET	MIC shift switch
Q615	Transistor	SP control
Q616,617	FET	AF mute
Q618	FET	SP control
Q619	FET	Side tone switch
Q620	Transistor	Side tone switch
Q621	Transistor	Beet shift switch
Q622	Transistor	5UC switch

Ref. No.	Part name	Description
Q623,624	FET	5UC switch
D1~4	Diode	T / R switch
D5,7 D10,11	Variable capacitance diode	Frequency control / TX VCO
D9,13	Variable capacitance diode	Frequency control / RX VCO
D17	Variable capacitance diode	Modulator
D18	Diode	Current steering
D100	Diode	TX/RX RF switch
D103	Zener diode	APC protect
D106,107	Diode	ANT switch
D108	Zener diode	APC switch
D200	Diode	SQL control
D201	Diode	Filter switch
D202	Diode	SQL rectifier
D203	Diode	Filter switch
D204	Diode	DMUTE control
D205	Diode	TX/RX RF switch
D207~210	Variable capacitance diode	RF BPF tuning
D211,213	Diode	ANT switch
D314	Diode	5R protector
D400	LED	LED Red & Green
D402	Diode	Reverse protection
D403	Diode	Power switch control
D404	Diode	Batt level control
D405	Diode	5M protector
D406	Diode	5M control
D408	Diode	5T control
D500~502	Diode	RTC BATT control
D600	Diode	AF BUFFER control
D601~603	Diode	Detector
D604	Zener diode	MIC shift control
D605	Diode	SP control
D606	Zener diode	MIC shift control
D607	Zener diode	SP control
D608	Zener diode	MIC shift control
D609	Diode	RXD control
D610	Diode	TXD control
D611	Zener diode	PTT PF TXD RXD control
D612	Zener diode	OPT control
D613	Diode	SSW control
D614	Diode	SP control

TK-2180

PARTS LIST

✻ New Parts. ⚠ indicates safety critical components.
Parts without **Parts No.** are not supplied.
Les articles non mentionnes dans le **Parts No.** ne sont pas fournis.
Teile ohne **Parts No.** werden nicht geliefert.

L : Scandinavia **K** : USA **P** : Canada
Y : PX (Far East, Hawaii) **T** : England **E** : Europe
Y : AAFES (Europe) **X** : Australia **M** : Other Areas

TK-2180 (Y50-5870-XX)
DISPLAY UNIT (X54-3470-XX)

Ref. No.	Address	New parts	Parts No.	Description	Destination
TK-2180					
1	1B	✻	A02-3847-03	CABINET ASSY	K
2	1A	✻	A02-3848-03	CABINET ASSY	K2
3	3A	✻	A10-4076-11	CHASSIS	
4	3B	✻	A62-1093-02	PANEL	
6	2D		B09-0625-03	CAP ACCESSORY	
7	1A	✻	B10-2752-22	FRONT GLASS	
8	2A	✻	B11-1815-04	FILTER (LCD)	
9	2A	✻	B11-1816-12	ILLUMINATION GUIDE (LCD)	
10	3B	✻	B11-1820-04	ILLUMINATION GUIDE (BUSY/TX)	
11	2A	✻	B38-0900-05	LCD ASSY	
12	2C	✻	B62-1759-00	INSTRUCTION MANUAL	
13	3A	✻	B72-2196-04	MODEL NAME PLATE	K
13	3A	✻	B72-2197-04	MODEL NAME PLATE	K2
15	2B		E04-0416-05	RF COAXIAL RECEPTACLE (SMA)	
16	3B		E23-1104-04	ANTENNA TERMINAL	
17	2A		E37-1101-05	SPEAKER WIRE (RED)	
18	2A		E37-1102-05	SPEAKER WIRE (BLACK)	
19	2A	✻	E37-1107-05	FLAT CABLE	
20	3B	✻	E58-0511-05	SQUARE SOCKET	
21	3B	✻	E72-0419-03	TERMINAL BLOCK	
23	3A	✻	F07-1880-04	COVER	
26	2A	✻	F15-1012-04	SHADOW PLATE	
27	3B	✻	F20-3350-04	INSULATING SHEET	
29	2A	✻	G10-1340-04	FIBROUS SHEET	
30	2A	✻	G10-1341-04	FIBROUS SHEET	
31	2A	✻	G11-4272-04	RUBBER CUSHION	
32	3A	✻	G11-4273-14	SHEET	
33	3A	✻	G11-4307-14	RUBBER SHEET (FINAL FET)	
34	1A	✻	G11-4326-04	SHEET	
35	3A	✻	G11-4332-04	SHEET	
36	2B		G13-1934-04	CUSHION	
37	2A	✻	G13-2055-04	CUSHION	
38	2A	✻	G13-2068-04	CUSHION	
39	2B	✻	G53-1598-01	PACKING	K
40	1A	✻	G53-1599-01	PACKING	K2
41	3B	✻	G53-1600-12	PACKING	
42	3B	✻	G53-1601-04	PACKING	
43	3A	✻	G53-1602-14	PACKING	
44	2B,3B	✻	G53-1603-04	PACKING	
46	2C,1D	✻	H12-3157-02	PACKING FIXTURE	
47	3D	✻	H52-2011-02	ITEM CARTON CASE	
49	2A	✻	J19-5460-02	HOLDER	
50	2B	✻	J19-5478-03	HOLDER	
51	2C	✻	J29-0710-05	HOOK ACCESSORY	
52	3B	✻	J30-1279-04	SPACER	
53	2B	✻	J82-0089-05	FPC (VOL/ENC)	
54	3B	✻	J82-0090-15	FPC (UNIVERSAL)	
55	3A	✻	J82-0091-15	FPC (PTT)	
57	1A	✻	K29-9302-23	KNOB (SIDE)	
58	1A	✻	K29-9303-03	BUTTON KNOB (SIDE)	
59	1B	✻	K29-9304-03	KNOB (VOLUME)	
60	1A	✻	K29-9305-03	KNOB (CH SELECTOR)	
A	2D		N08-0548-04	DRESSED SCREW ACCESSORY	
B	3B	✻	N09-2426-04	HEXAGON HEAD SCREW	
C	3B	✻	N14-0806-04	CIRCULAR NUT	
D	3B	✻	N14-0810-04	CIRCULAR NUT	
E	2A,3A		N30-2004-45	PAN HEAD MACHINE SCREW	
F	2B		N30-2604-46	PAN HEAD MACHINE SCREW	
G	3A		N30-2608-45	PAN HEAD MACHINE SCREW	
H	2C	✻	N30-3008-60	PAN HEAD MACHINE SCREW ACC	
J	2A,2B		N83-2005-46	PAN HEAD TAPTITE SCREW	
62	3B	✻	R31-0652-05	VARIABLE RESISTOR	
64	2B	✻	S60-0430-05	ROTARY SWITCH	
66	1A	✻	T07-0749-15	SPEAKER	
68	3A	✻	W09-0971-05	LITHIUM CELL	
DISPLAY UNIT (X54-3470-XX) -10 : K -11 : K2					
D501,502			B30-2215-05	LED	
D511-516			B30-2215-05	LED	K2
D517-520			B30-2210-05	LED (TLY)	
C500-503			CK73HB1H471K	CHIP C 470PF K	
C508			CK73HB1H471K	CHIP C 470PF K	
C513			CK73GB1C104K	CHIP C 0.10UF K	
C518			CK73HB1H471K	CHIP C 470PF K	
C522			CK73HB1H102K	CHIP C 1000PF K	
C523,524		✻	C92-0827-05	CHIP-TAN 4.7UF 16WV	
C525			CK73HB1H471K	CHIP C 470PF K	
C527,528		✻	C92-0826-05	CHIP-TAN 1.0UF 16WV	
C537,538			CK73GB0J475K	CHIP C 4.7UF K	
C539-546			CC73HCH1H470J	CHIP C 47PF J	
C548-551			CC73HCH1H470J	CHIP C 47PF J	
C553,554			CK73HB1H102K	CHIP C 1000PF K	
C555		✻	CK73HB0J105K	CHIP C 1.0UF K	
C556			CK73HB1H102K	CHIP C 1000PF K	
C562		✻	CK73HB0J105K	CHIP C 1.0UF K	
CN507		✻	E40-6410-05	FLAT CABLE CONNECTOR	
CN508,509			E40-6413-05	FLAT CABLE CONNECTOR	
L550			L92-0163-05	BEADS CORE	
L553,554			L92-0419-15	FERRITE CHIP	
L555			L92-0163-05	BEADS CORE	
CP501			RK75HA1J102J	CHIP-COM 1.0K J 1/16W	
CP503,504			RK75HA1J102J	CHIP-COM 1.0K J 1/16W	
CP506,507			RK75HA1J102J	CHIP-COM 1.0K J 1/16W	
CP509			RK75HA1J102J	CHIP-COM 1.0K J 1/16W	
R500,501			RK73HB1J102J	CHIP R 1.0K J 1/16W	
R517			R92-1368-05	CHIP R 0 OHM	
R518			RK73HB1J331J	CHIP R 330 J 1/16W	
R520			RK73HB1J472J	CHIP R 4.7K J 1/16W	
R522			RK73HB1J391J	CHIP R 390 J 1/16W	
R524-526			RK73HB1J391J	CHIP R 390 J 1/16W	K2

PARTS LIST

DISPLAY UNIT (X54-3470-XX)
TX-RX UNIT (X57-6930-10)

Ref. No.	Address	New parts	Parts No.	Description	Destination
R527			R92-1368-05	CHIP R 0 OHM	
R531			R92-1368-05	CHIP R 0 OHM	
R533			R92-1368-05	CHIP R 0 OHM	
R534			RK73HB1J101J	CHIP R 100 J 1/16W	
R535			R92-1368-05	CHIP R 0 OHM	
R537			RK73HB1J101J	CHIP R 100 J 1/16W	
R540-543			RK73HB1J471J	CHIP R 470 J 1/16W	
R544			RK73HB1J154J	CHIP R 150K J 1/16W	
R545			RK73HB1J474J	CHIP R 470K J 1/16W	
R546			RK73HB1J823J	CHIP R 82K J 1/16W	
R547			RK73HB1J393J	CHIP R 39K J 1/16W	
R552			RK73HB1J471J	CHIP R 470 J 1/16W	
R559			R92-1368-05	CHIP R 0 OHM	
R560			RK73HB1J474J	CHIP R 470K J 1/16W	
R561			RK73HB1J103J	CHIP R 10K J 1/16W	
R562-568			RK73HB1J102J	CHIP R 1.0K J 1/16W	
R570			R92-1252-05	CHIP R 0 OHM J 1/16W	
R571			R92-1368-05	CHIP R 0 OHM	
R573			RK73HB1J474J	CHIP R 470K J 1/16W	
R574,575			R92-1368-05	CHIP R 0 OHM	
MIC500	2A		T91-0579-05	MIC ELEMENT	
D500			MA2S111	DIODE	
D522			DA221	DIODE	
IC500			BU2099FV	MOS IC	
IC501		✻	XC6201P352MR	MOS IC	
IC502,503			HD74LV2G34AUS	MOS IC	
Q501			2SC4617(S)	TRANSISTOR	
Q502			2SB1132(Q,R)	TRANSISTOR	
Q504			2SK1830	FET	
Q505		✻	2SJ144(Y)	FET	
TX-RX UNIT (X57-6930-10)					
D400		✻	B30-2278-05	LED (RED/YELLOW)	
C1,2			CK73HB1H102K	CHIP C 1000PF K	
C3			CC73HCH1H100C	CHIP C 10PF C	
C4			CK73HB1C103K	CHIP C 0.010UF K	
C5			CC73HCH1H100C	CHIP C 10PF C	
C6,7			CK73HB1H102K	CHIP C 1000PF K	
C8			CK73HB1H471K	CHIP C 470PF K	
C9-13			CK73HB1H102K	CHIP C 1000PF K	
C14			CC73HCH1H390G	CHIP C 39PF G	
C15			CC73HCH1H220G	CHIP C 22PF G	
C16			CC73HCH1H040B	CHIP C 4.0PF B	
C17			CC73HCH1H020B	CHIP C 2.0PF B	
C18			CK73HB1H102K	CHIP C 1000PF K	
C19			CK73HB1H471K	CHIP C 470PF K	
C20			CK73HB1H102K	CHIP C 1000PF K	
C21			CK73HB1C223K	CHIP C 0.022UF K	
C22			CC73HCH1H390G	CHIP C 39PF G	
C23			CC73HCH1H180G	CHIP C 18PF G	
C24			C92-0001-05	CHIP C 0.1UF 35WV	
C25			CC73HCH1H070B	CHIP C 7.0PF B	
C26			C92-0504-05	CHIP-TAN 0.68UF 20WV	
C27			CK73HB1H471K	CHIP C 470PF K	
C28			CK73HB1H102K	CHIP C 1000PF K	
C29,30			CK73HB1H471K	CHIP C 470PF K	
C31			C92-0001-05	CHIP C 0.1UF 35WV	
C32,33			CC73HCH1H101J	CHIP C 100PF J	

Ref. No.	Address	New parts	Parts No.	Description	Destination
C34			CK73GB0J475K	CHIP C 4.7UF K	
C37			CC73HCH1H820J	CHIP C 82PF J	
C38			CC73HCH1H110J	CHIP C 11PF J	
C39			CC73HCH1H330J	CHIP C 33PF J	
C41			CC73HCH1H070D	CHIP C 7.0PF D	
C45			CC73HCH1HR75C	CHIP C 0.75PF C	
C46			CC73HCH1H070B	CHIP C 7.0PF B	
C47			CC73HCH1H080B	CHIP C 8.0PF B	
C48			CC73HCH1H110J	CHIP C 11PF J	
C49			CC73HCH1H150G	CHIP C 15PF G	
C50,51			CK73GB1H103K	CHIP C 0.010UF K	
C52			C92-0714-05	CHIP-TAN 4.7UF 6.3WV	
C53,54			CC73HCH1H0R5B	CHIP C 0.5PF B	
C55			CK73HB1H102K	CHIP C 1000PF K	
C57-59			CK73HB1H102K	CHIP C 1000PF K	
C60			C92-0713-05	CHIP-TAN 10UF 6.3WV	
C61			CK73HB1H102K	CHIP C 1000PF K	
C62			CC73HCH1H330J	CHIP C 33PF J	
C63			CC73HCH1H050C	CHIP C 5.0PF C	
C64			CC73HCH1H150J	CHIP C 15PF J	
C65-67			CK73HB1H102K	CHIP C 1000PF K	
C68			CC73HCH1H100C	CHIP C 10PF C	
C70-73			CK73HB1H471K	CHIP C 470PF K	
C76			CC73HCH1H101J	CHIP C 100PF J	
C77			CK73HB1H222K	CHIP C 2200PF K	
C100			CK73HB1H471K	CHIP C 470PF K	
C101			CK73HB1H102K	CHIP C 1000PF K	
C106			CK73HB1H102K	CHIP C 1000PF K	
C107			CC73HCH1H470J	CHIP C 47PF J	
C109,110			CK73HB1H102K	CHIP C 1000PF K	
C111			CK73HB1A104K	CHIP C 0.10UF K	
C112			CC73HCH1H390G	CHIP C 39PF G	
C113			CK73HB1H102K	CHIP C 1000PF K	
C114			CC73HCH1H100B	CHIP C 10PF B	
C116			CK73HB1H102K	CHIP C 1000PF K	
C117			CK73HB1A104K	CHIP C 0.10UF K	
C118,119			CC73HCH1H100C	CHIP C 10PF C	
C120			CC73HCH1H101J	CHIP C 100PF J	
C121		✻	CK73GB1E105K	CHIP C 1.0UF K	
C122			CK73HB1H471K	CHIP C 470PF K	
C123			C92-0565-05	CHIP-TAN 6.8UF 10WV	
C125,126			CK73HB1H102K	CHIP C 1000PF K	
C128		✻	CK73HB0J105K	CHIP C 1.0UF K	
C131			CK73HB1H102K	CHIP C 1000PF K	
C132			CC73HCH1H101J	CHIP C 100PF J	
C133			CK73HB1H471K	CHIP C 470PF K	
C134			CC73GCH1H100C	CHIP C 10PF C	
C135			CK73HB1H102K	CHIP C 1000PF K	
C136			CK73HB1C103K	CHIP C 0.010UF K	
C138			CK73HB1H102K	CHIP C 1000PF K	
C139			CK73GB1C104K	CHIP C 0.10UF K	
C140		✻	CK73GB1E105K	CHIP C 1.0UF K	
C141			CC73GCH1H180J	CHIP C 18PF J	
C142			CC73GCH1H820J	CHIP C 82PF J	
C143			CK73HB1C103K	CHIP C 0.010UF K	
C144			CK73HB1H102K	CHIP C 1000PF K	
C145,146			CC73GCH1H120J	CHIP C 12PF J	
C147			CC73GCH1H030B	CHIP C 3.0PF B	
C149			CC73GCH1H101J	CHIP C 100PF J	
C150			CC73HCH1H101J	CHIP C 100PF J	

PARTS LIST

TX-RX UNIT (X57-6930-10)

Ref. No.	Address	New parts	Parts No.	Description			Desti-nation
C151			CC73GCH1H330G	CHIP C	33PF	G	
C152			CK73GB1H102K	CHIP C	1000PF	K	
C153			CC73HCH1H050B	CHIP C	5.0PF	B	
C154			CC73HCH1H090B	CHIP C	9.0PF	B	
C155			CC73HCH1H270G	CHIP C	27PF	G	
C156			CC73HCH1H130G	CHIP C	13PF	G	
C157			CC73HCH1H150G	CHIP C	15PF	G	
C158			CC73HCH1H180G	CHIP C	18PF	G	
C159			CC73HCH1H050B	CHIP C	5.0PF	B	
C163			CC73HCH1H100B	CHIP C	10PF	B	
C165			CC73HCH1H270J	CHIP C	27PF	J	
C168			CC73HCH1H220J	CHIP C	22PF	J	
C200			CK73HB1A104K	CHIP C	0.10UF	K	
C201			CK73HB1C103K	CHIP C	0.010UF	K	
C202			CK73HB1C223K	CHIP C	0.022UF	K	
C203			CK73HB1H102K	CHIP C	1000PF	K	
C204			CK73HB1A104K	CHIP C	0.10UF	K	
C205			CK73HB1C103K	CHIP C	0.010UF	K	
C206,207			CK73HB1A104K	CHIP C	0.10UF	K	
C208			CK73HB1H182K	CHIP C	1800PF	K	
C209,210			CK73HB1A104K	CHIP C	0.10UF	K	
C211,212			CC73HCH1H121J	CHIP C	120PF	J	
C213			CC73HCH1H181J	CHIP C	180PF	J	
C214			C92-0773-05	CHIP-TAN	15UF	6.3WV	
C215,216			CK73HB1A104K	CHIP C	0.10UF	K	
C217			CC73HCH1H680J	CHIP C	68PF	J	
C219			CK73HB1A333K	CHIP C	0.033UF	K	
C220			CK73HB1C103K	CHIP C	0.010UF	K	
C221			C92-0713-05	CHIP-TAN	10UF	6.3WV	
C222			CK73HB1A104K	CHIP C	0.10UF	K	
C226			CK73HB1H471K	CHIP C	470PF	K	
C227,228			CK73HB1C103K	CHIP C	0.010UF	K	
C229			CC73HCH1H1R5B	CHIP C	1.5PF	B	
C230			CC73HCH1H270G	CHIP C	27PF	G	
C231			CC73HCH1H060B	CHIP C	6.0PF	B	
C232			CK73HB1C103K	CHIP C	0.010UF	K	
C233			CK73HB1H471K	CHIP C	470PF	K	
C234			CK73HB1A104K	CHIP C	0.10UF	K	
C235,236			CK73HB1C103K	CHIP C	0.010UF	K	
C237			CK73HB1H102K	CHIP C	1000PF	K	
C238			CC73HCH1H150J	CHIP C	15PF	J	
C239			CC73HCH1H390J	CHIP C	39PF	J	
C240			CC73HCH1H020B	CHIP C	2.0PF	B	
C241			CC73HCH1H180J	CHIP C	18PF	J	
C242			CK73HB1H102K	CHIP C	1000PF	K	
C243			CK73HB1C103K	CHIP C	0.010UF	K	
C244			CC73HCH1H1R5B	CHIP C	1.5PF	B	
C245			CK73HB1H102K	CHIP C	1000PF	K	
C246			CC73HCH1H090B	CHIP C	9.0PF	B	
C247			CC73HCH1H030B	CHIP C	3.0PF	B	
C248			CK73HB1H102K	CHIP C	1000PF	K	
C250			CK73HB1H102K	CHIP C	1000PF	K	
C253			CK73HB1H102K	CHIP C	1000PF	K	
C255			CC73GCH1H040B	CHIP C	4.0PF	B	
C256			CC73HCH1H040B	CHIP C	4.0PF	B	
C257			CC73HCH1H470J	CHIP C	47PF	J	
C258			CK73HB1H102K	CHIP C	1000PF	K	
C260			CC73GCH1H020B	CHIP C	2.0PF	B	
C261			CK73HB1H102K	CHIP C	1000PF	K	
C262			CC73HCH1H470J	CHIP C	47PF	J	

Ref. No.	Address	New parts	Parts No.	Description			Desti-nation
C263			CC73HCH1H010B	CHIP C	1.0PF	B	
C264			C92-0714-05	CHIP-TAN	4.7UF	6.3WV	
C265			CK73HB1H102K	CHIP C	1000PF	K	
C269			CK73HB1H102K	CHIP C	1000PF	K	
C270			CK73HB1H471K	CHIP C	470PF	K	
C271			CK73HB0J105K	CHIP C	1.0UF	K	
C273			CK73HB1H471K	CHIP C	470PF	K	
C274			CK73HB1H102K	CHIP C	1000PF	K	
C275			CC73GCH1H4R5B	CHIP C	4.5PF	B	
C276			CC73HCH1H010B	CHIP C	1.0PF	B	
C277			CC73HCH1H330J	CHIP C	33PF	J	
C279			CC73GCH1H1R5B	CHIP C	1.5PF	B	
C280			CK73HB1H102K	CHIP C	1000PF	K	
C281			CC73HCH1H330J	CHIP C	33PF	J	
C282			CC73HCH1H020B	CHIP C	2.0PF	B	
C283			CC73HCH1H270J	CHIP C	27PF	J	
C284			CC73GCH1H100C	CHIP C	10PF	C	
C287			CC73GCH1H330J	CHIP C	33PF	J	
C288,289			CC73HCH1H220J	CHIP C	22PF	J	
C290			CK73HB0J224K	CHIP C	0.22UF	K	
C292			CK73HB1C103K	CHIP C	0.010UF	K	
C400			CK73HB1H102K	CHIP C	1000PF	K	
C401,402			CK73HB1H471K	CHIP C	470PF	K	
C403			CK73HB1C103K	CHIP C	0.010UF	K	
C404			CK73HB1H471K	CHIP C	470PF	K	
C405			CC73HCH1H101J	CHIP C	100PF	J	
C406-414			CK73HB1H471K	CHIP C	470PF	K	
C415			CK73FB1A475K	CHIP C	4.7UF	K	
C416			CK73HB1H102K	CHIP C	1000PF	K	
C417			CK73HB1H471K	CHIP C	470PF	K	
C418			CK73HB1H102K	CHIP C	1000PF	K	
C419		✻	CK73GB1E105K	CHIP C	1.0UF	K	
C420			CK73GB1C104K	CHIP C	0.10UF	K	
C421			CK73GB1A224K	CHIP C	0.22UF	K	
C422		✻	CK73GB1E105K	CHIP C	1.0UF	K	
C423		✻	C92-0825-05	CHIP-TAN	10UF	10WV	
C424			CK73HB1H471K	CHIP C	470PF	K	
C425		✻	CK73GB1E105K	CHIP C	1.0UF	K	
C426			CC73HCH1H101J	CHIP C	100PF	J	
C427		✻	CK73GB1E105K	CHIP C	1.0UF	K	
C428			CK73HB1H471K	CHIP C	470PF	K	
C429		✻	CK73GB1E105K	CHIP C	1.0UF	K	
C431			CK73HB1H471K	CHIP C	470PF	K	
C432		✻	C92-0825-05	CHIP-TAN	10UF	10WV	
C433			CK73HB1H471K	CHIP C	470PF	K	
C434			CC73HCH1H101J	CHIP C	100PF	J	
C435			CK73GB1A224K	CHIP C	0.22UF	K	
C436			CK73GB1H103K	CHIP C	0.010UF	K	
C437			CC73HCH1H101J	CHIP C	100PF	J	
C440			CK73HB1H471K	CHIP C	470PF	K	
C441		✻	CK73GB1E105K	CHIP C	1.0UF	K	
C442			CK73GB1A224K	CHIP C	0.22UF	K	
C443		✻	CK73GB1E105K	CHIP C	1.0UF	K	
C444			CK73HB1H471K	CHIP C	470PF	K	
C445			CC73HCH1H470J	CHIP C	47PF	J	
C446			CK73HB1H471K	CHIP C	470PF	K	
C447			CK73HB1E472K	CHIP C	4700PF	K	
C450,451			CK73GB0J475K	CHIP C	4.7UF	K	
C452		✻	CK73GB1E104K	CHIP C	0.10UF	K	
C500			C92-0712-05	CHIP-TAN	22UF	6.3WV	

PARTS LIST

TX-RX UNIT (X57-6930-10)

Ref. No.	Address	New parts	Parts No.	Description			Destination
C502			C92-0712-05	CHIP-TAN	22UF	6.3WV	
C503		✻	CK73GB1E105K	CHIP C	1.0UF	K	
C505-508		✻	CK73GB1E105K	CHIP C	1.0UF	K	
C509			CC73HCH1H270J	CHIP C	27PF	J	
C510			CC73HCH1H040C	CHIP C	4.0PF	C	
C511			CC73HCH1H270J	CHIP C	27PF	J	
C512			CK73HB1C103K	CHIP C	0.010UF	K	
C514			CK73HB1C103K	CHIP C	0.010UF	K	
C515			CC73HCH1H150G	CHIP C	15PF	G	
C516			CK73HB1C103K	CHIP C	0.010UF	K	
C517			CK73HB1A104K	CHIP C	0.10UF	K	
C518			CK73HB0J105K	CHIP C	1.0UF	K	
C600			CK73HB1A104K	CHIP C	0.10UF	K	
C601			CC73HCH1H220J	CHIP C	22PF	J	
C602			CK73HB1A104K	CHIP C	0.10UF	K	
C603			CK73HB1E472K	CHIP C	4700PF	K	
C604,605			CC73HCH1H680J	CHIP C	68PF	J	
C608			CK73HB1A104K	CHIP C	0.10UF	K	
C609,610			CK73HB1C103K	CHIP C	0.010UF	K	
C611			CC73HCH1H101J	CHIP C	100PF	J	
C612,613			CK73HB1A104K	CHIP C	0.10UF	K	
C614			CK73HB1H471K	CHIP C	470PF	K	
C615			CC73HCH1H101J	CHIP C	100PF	J	
C616			CK73HB1H471K	CHIP C	470PF	K	
C617			C92-0656-05	CHIP-TAN	2.2UF	6.3WV	
C618			C92-0713-05	CHIP-TAN	10UF	6.3WV	
C619			CK73HB1H561K	CHIP C	560PF	K	
C620			CK73HB1A104K	CHIP C	0.10UF	K	
C621			CK73HB1C103K	CHIP C	0.010UF	K	
C625			CK73HB1A104K	CHIP C	0.10UF	K	
C627			CK73HB1C103K	CHIP C	0.010UF	K	
C628			CK73HB1A104K	CHIP C	0.10UF	K	
C630			CK73HB1H271K	CHIP C	270PF	K	
C631			CK73HB1A104K	CHIP C	0.10UF	K	
C632			CK73GB1E105K	CHIP C	1.0UF	K	
C633			CK73HB1C103K	CHIP C	0.010UF	K	
C635			CC73HCH1H101J	CHIP C	100PF	J	
C636			CK73HB1A104K	CHIP C	0.10UF	K	
C638			CK73HB1H102K	CHIP C	1000PF	K	
C640,641			CK73GB0J475K	CHIP C	4.7UF	K	
C642			CK73HB1A473K	CHIP C	0.047UF	K	
C644			CK73HB1C123K	CHIP C	0.012UF	K	
C645			CK73HB1A104K	CHIP C	0.10UF	K	
C646			CK73GB0J475K	CHIP C	4.7UF	K	
C647			CK73HB1C123K	CHIP C	0.012UF	K	
C648			CK73HB1H102K	CHIP C	1000PF	K	
C650,651			CK73HB1A104K	CHIP C	0.10UF	K	
C652			CC73HCH1H680J	CHIP C	68PF	J	
C653-655			CK73HB1A104K	CHIP C	0.10UF	K	
C656		✻	CK73HB0J224K	CHIP C	0.22UF	K	
C657			CC73HCH1H330J	CHIP C	33PF	J	
C658			CK73HB1A104K	CHIP C	0.10UF	K	
C659,660			CK73GB1C104K	CHIP C	0.10UF	K	
C661			CK73HB1A104K	CHIP C	0.10UF	K	
C662			CK73HB1H102K	CHIP C	1000PF	K	
C663		✻	CK73HB0J105K	CHIP C	1.0UF	K	
C665			CK73GB1E223K	CHIP C	0.022UF	K	
C666			CK73HB1A104K	CHIP C	0.10UF	K	
C667			CC73HCH1H470J	CHIP C	47PF	J	
C668			CC73HCH1H120J	CHIP C	12PF	J	

Ref. No.	Address	New parts	Parts No.	Description			Destination
C669			CK73HB1H102K	CHIP C	1000PF	K	
C670			CK73HB1A104K	CHIP C	0.10UF	K	
C672			CK73HB1H102K	CHIP C	1000PF	K	
C673-675			CK73HB1A104K	CHIP C	0.10UF	K	
C676			CC73HCH1H470J	CHIP C	47PF	J	
C677			CK73HB1H222K	CHIP C	2200PF	K	
C678			CK73GB1C104K	CHIP C	0.10UF	K	
C679,680			CK73HB1A104K	CHIP C	0.10UF	K	
C681			CK73HB1H102K	CHIP C	1000PF	K	
C682			CK73HB1C153K	CHIP C	0.015UF	K	
C683			CK73HB1C123K	CHIP C	0.012UF	K	
C684			CK73HB1H102K	CHIP C	1000PF	K	
C685			CK73HB1A104K	CHIP C	0.10UF	K	
C686			CK73HB1A683K	CHIP C	0.068UF	K	
C687			C92-0713-05	CHIP-TAN	10UF	6.3WV	
C688			CK73GB1A474K	CHIP C	0.47UF	K	
C689			CK73HB1C103K	CHIP C	0.010UF	K	
C690			CC73HCH1H470J	CHIP C	47PF	J	
C691			CK73GB1A474K	CHIP C	0.47UF	K	
C692			CC73HCH1H470J	CHIP C	47PF	J	
C693			CK73GB1A474K	CHIP C	0.47UF	K	
C694			CK73HB1H152K	CHIP C	1500PF	K	
C695			CK73HB1A104K	CHIP C	0.10UF	K	
C696			CK73HB1C103K	CHIP C	0.010UF	K	
C697,698			CK73HB1A104K	CHIP C	0.10UF	K	
C699			C92-0816-05	CHIP-TAN	10UF	16WV	
C700			CC73HCH1H470J	CHIP C	47PF	J	
C702-704			CC73HCH1H470J	CHIP C	47PF	J	
C705			CK73HB1A104K	CHIP C	0.10UF	K	
C707			CK73HB1H102K	CHIP C	1000PF	K	
C708,709			CC73HCH1H470J	CHIP C	47PF	J	
C711-714			CK73HB1H102K	CHIP C	1000PF	K	
C715-717			CK73HB1A104K	CHIP C	0.10UF	K	
C718			CC73HCH1H180J	CHIP C	18PF	J	
C719			CC73HCH1H220J	CHIP C	22PF	J	
C720			CK73HB1H471K	CHIP C	470PF	K	
C721			CK73HB1H102K	CHIP C	1000PF	K	
C725			CK73HB1H392K	CHIP C	3900PF	K	
C727			CK73HB1A104K	CHIP C	0.10UF	K	
C728			CK73HB0J105K	CHIP C	1.0UF	K	
C729			CK73HB1H331K	CHIP C	330PF	K	
C730			CK73HB1H332K	CHIP C	3300PF	K	
C732			CK73HB1H471K	CHIP C	470PF	K	
C734			CC73HCH1H220J	CHIP C	22PF	J	
C736			CC73HCH1H470J	CHIP C	47PF	J	
C737			CK73GB0J475K	CHIP C	4.7UF	K	
C738			CK73HB1H331K	CHIP C	330PF	K	
C739-748			CC73HCH1H470J	CHIP C	47PF	J	
C750			CC73HCH1H470J	CHIP C	47PF	J	
C752,753			CC73HCH1H050B	CHIP C	5.0PF	B	
C754			CK73HB1A104K	CHIP C	0.10UF	K	
C755			CK73HB1E472K	CHIP C	4700PF	K	
C756			CK73HB1A104K	CHIP C	0.10UF	K	
C757			CK73HB1E472K	CHIP C	4700PF	K	
C759			CK73HB1C123K	CHIP C	0.012UF	K	
C762			CK73HB1H102K	CHIP C	1000PF	K	
TC1,2			C05-0384-05	CERAMIC TRIMMER CAP (10PF)			
CN400			E40-5823-05	FLAT CABLE CONNECTOR			
CN500			E40-6413-05	FLAT CABLE CONNECTOR			

PARTS LIST

TX-RX UNIT (X57-6930-10)

Ref. No.	Address	New parts	Parts No.	Description	Desti-nation
CN502,503		✻	E23-0342-05	TEST TERMINAL	
CN600			E40-6389-05	PIN ASSY	
CN602			E40-5856-05	FLAT CABLE CONNECTOR	
CN603		✻	E23-1263-05	TERMINAL	
CN604		✻	E23-1262-05	TERMINAL	
F400			F53-0190-05	FUSE	
F601,602		✻	F53-0315-05	FUSE	
CN501			J19-5386-05	HOLDER	
CD200		✻	L79-1834-05	TUNING COIL	
CF200		✻	L72-1013-05	CERAMIC FILTER	
CF201		✻	L72-1014-05	CERAMIC FILTER	
L1			L40-4795-85	SMALL FIXED INDUCTOR (4.7UH)	
L2,3		✻	L41-5667-31	SMALL FIXED INDUCTOR	
L4			L40-8275-92	SMALL FIXED INDUCTOR (82NH)	
L5			L40-6875-92	SMALL FIXED INDUCTOR (68NH)	
L6,7		✻	L41-5667-31	SMALL FIXED INDUCTOR	
L8			L92-0138-05	FERRITE CHIP	
L9,10			L40-1001-86	SMALL FIXED INDUCTOR (10UH)	
L11			L40-2702-86	SMALL FIXED INDUCTOR (27UH)	
L12			L40-1502-86	SMALL FIXED INDUCTOR (15UH)	
L17			L40-3978-67	SMALL FIXED INDUCTOR (39NH)	
L18			L40-2278-67	SMALL FIXED INDUCTOR (22NH)	
L19,20			L40-1001-86	SMALL FIXED INDUCTOR (10UH)	
L21			L92-0163-05	BEADS CORE	
L22,23			L40-1085-92	SMALL FIXED INDUCTOR (100NH)	
L24			L40-3975-92	SMALL FIXED INDUCTOR (39NH)	
L100			L40-4775-92	SMALL FIXED INDUCTOR (47NH)	
L101			L40-1085-92	SMALL FIXED INDUCTOR (100NH)	
L102			L92-0138-05	FERRITE CHIP	
L103			L40-2775-92	SMALL FIXED INDUCTOR (27NH)	
L104			L40-1585-54	SMALL FIXED INDUCTOR (150NH)	
L105			L92-0149-05	FERRITE CHIP	
L106			L40-1875-54	SMALL FIXED INDUCTOR (18NH)	
L107			L34-4689-05	AIR-CORE COIL	
L108			L92-0149-05	FERRITE CHIP	
L109			L40-2295-85	SMALL FIXED INDUCTOR (2.2UH)	
L110			L34-4576-05	AIR-CORE COIL	
L111,112			L34-4567-05	AIR-CORE COIL	
L113			L34-4566-05	AIR-CORE COIL	
L115			L34-4689-05	AIR-CORE COIL	
L116			L34-4573-05	AIR-CORE COIL	
L117			L34-4576-05	AIR-CORE COIL	
L200			L92-0141-05	FERRITE CHIP	
L201			L40-1091-86	SMALL FIXED INDUCTOR (1.0UH)	
L202			L40-1591-86	SMALL FIXED INDUCTOR (1.5UH)	
L203			L92-0138-05	FERRITE CHIP	
L204			L40-2785-85	SMALL FIXED INDUCTOR (0.27UH)	
L206,207			L40-3975-92	SMALL FIXED INDUCTOR (39NH)	
L208			L40-1085-92	SMALL FIXED INDUCTOR (100NH)	
L209			L40-2785-92	SMALL FIXED INDUCTOR (270NH)	
L211			L41-6878-14	SMALL FIXED INDUCTOR	
L213			L92-0138-05	FERRITE CHIP	
L214			L41-6878-14	SMALL FIXED INDUCTOR	
L215			L41-8278-14	SMALL FIXED INDUCTOR	
L216			L41-6878-14	SMALL FIXED INDUCTOR	
L218			L40-5675-92	SMALL FIXED INDUCTOR (56NH)	
L220			L40-5685-85	SMALL FIXED INDUCTOR (0.56UH)	
L400			L92-0149-05	FERRITE CHIP	

Ref. No.	Address	New parts	Parts No.	Description	Desti-nation
L500-503			L92-0163-05	BEADS CORE	
L600			L92-0163-05	BEADS CORE	
L601			L92-0419-15	FERRITE CHIP	
L602-607			L92-0163-05	BEADS CORE	
L608,609			L92-0467-05	FERRITE CHIP	
L610,611			L92-0408-05	FERRITE CHIP	
L612			L92-0163-05	BEADS CORE	
L613		✻	L92-0419-15	FERRITE CHIP	
L615			L92-0163-05	BEADS CORE	
X1		✻	L77-1952-05	TCXO (16.8MHZ)	
X200		✻	L77-1957-05	CRYSTAL RESONATOR (59.395MHZ)	
X500		✻	L77-1958-05	CRYSTAL RESONATOR (11.0592MHZ)	
X501			L77-1802-05	CRYSTAL RESONATOR (32768HZ)	
X600		✻	L77-1965-05	CRYSTAL RESONATOR (3.6864MHZ)	
XF200		✻	L71-0622-05	MCF (59.85MHZ)	
CP400,401			RK75HA1J473J	CHIP-COM 47K J 1/16W	
CP500-510			RK75HA1J102J	CHIP-COM 1.0K J 1/16W	
CP511		✻	RK75HA1J331J	CHIP-COM 330 J 1/16W	
CP512-515			RK75HA1J102J	CHIP-COM 1.0K J 1/16W	
CP516			RK75HA1J103J	CHIP-COM 10K J 1/16W	
CP517			RK75HA1J102J	CHIP-COM 1.0K J 1/16W	
CP518			RK75HA1J473J	CHIP-COM 47K J 1/16W	
CP519			RK75HA1J103J	CHIP-COM 10K J 1/16W	
CP521			RK75HA1J102J	CHIP-COM 1.0K J 1/16W	
CP522		✻	RK75HA1J101J	CHIP-COM 100 J 1/16W	
CP600			RK75HA1J473J	CHIP-COM 47K J 1/16W	
CP601-603			RK75HA1J102J	CHIP-COM 1.0K J 1/16W	
CP604,605		✻	RK75HA1J331J	CHIP-COM 330 J 1/16W	
CP606			RK75HA1J102J	CHIP-COM 1.0K J 1/16W	
CP607,608		✻	RK75HA1J101J	CHIP-COM 100 J 1/16W	
R2			RK73HB1J101J	CHIP R 100 J 1/16W	
R3			R92-1368-05	CHIP R 0 OHM	
R4			RK73HB1J100J	CHIP R 10 J 1/16W	
R5			RK73HB1J103J	CHIP R 10K J 1/16W	
R6			RK73HB1J223J	CHIP R 22K J 1/16W	
R7			RK73HB1J472J	CHIP R 4.7K J 1/16W	
R8-10			RK73HB1J100J	CHIP R 10 J 1/16W	
R11			RK73HB1J102J	CHIP R 1.0K J 1/16W	
R12			RK73HB1J472J	CHIP R 4.7K J 1/16W	
R13			RK73HB1J154J	CHIP R 150K J 1/16W	
R14,15			RK73HB1J100J	CHIP R 10 J 1/16W	
R16,17			RK73HB1J223J	CHIP R 22K J 1/16W	
R18			RK73HB1J472J	CHIP R 4.7K J 1/16W	
R19			RK73HB1J182J	CHIP R 1.8K J 1/16W	
R20			RK73HB1J331J	CHIP R 330 J 1/16W	
R21			RK73HB1J561J	CHIP R 560 J 1/16W	
R22			RK73HB1J560J	CHIP R 56 J 1/16W	
R23			RK73HB1J223J	CHIP R 22K J 1/16W	
R24			RK73HB1J103J	CHIP R 10K J 1/16W	
R25			RK73HB1J563J	CHIP R 56K J 1/16W	
R26,27			R92-1368-05	CHIP R 0 OHM	
R30			RK73HB1J473J	CHIP R 47K J 1/16W	
R34,35			RK73HB1J274J	CHIP R 270K J 1/16W	
R36,37			RK73HB1J271J	CHIP R 270 J 1/16W	
R38,39			RK73HB1J220J	CHIP R 22 J 1/16W	
R40			RK73HB1J154J	CHIP R 150K J 1/16W	
R41			RK73HB1J472J	CHIP R 4.7K J 1/16W	
R42			RK73HB1J474J	CHIP R 470K J 1/16W	
R43			RK73HB1J101J	CHIP R 100 J 1/16W	
R44			RK73HB1J472J	CHIP R 4.7K J 1/16W	

PARTS LIST

TX-RX UNIT (X57-6930-10)

Ref. No.	Address	New parts	Parts No.	Description				Desti-nation
R45			RK73HB1J332J	CHIP R	3.3K	J	1/16W	
R46			RK73HB1J103J	CHIP R	10K	J	1/16W	
R47			RK73HB1J271J	CHIP R	270	J	1/16W	
R48			RK73HB1J222J	CHIP R	2.2K	J	1/16W	
R49			RK73HB1J470J	CHIP R	47	J	1/16W	
R50			RK73GB1J472J	CHIP R	4.7K	J	1/16W	
R51			R92-1368-05	CHIP R	0 OHM			
R53			R92-1368-05	CHIP R	0 OHM			
R100			RK73HH1J333D	CHIP R	33K	D	1/16W	
R101			RK73HB1J472J	CHIP R	4.7K	J	1/16W	
R103,104			R92-1368-05	CHIP R	0 OHM			
R106			R92-1368-05	CHIP R	0 OHM			
R111			RK73HB1J101J	CHIP R	100	J	1/16W	
R112			RK73HB1J103J	CHIP R	10K	J	1/16W	
R113			RK73HB1J223J	CHIP R	22K	J	1/16W	
R115			RK73HB1J331J	CHIP R	330	J	1/16W	
R116			RK73HB1J683J	CHIP R	68K	J	1/16W	
R117			RK73HB1J473J	CHIP R	47K	J	1/16W	
R119			RK73HB1J470J	CHIP R	47	J	1/16W	
R121			RK73HB1J331J	CHIP R	330	J	1/16W	
R122			RK73HB1J271J	CHIP R	270	J	1/16W	
R123,124			R92-1368-05	CHIP R	0 OHM			
R125			RK73EB2ER39K	CHIP R	0.39	K	1/4W	
R126			RK73HB1J820J	CHIP R	82	J	1/16W	
R127			RK73EB2ER39K	CHIP R	0.39	K	1/4W	
R128			RK73HH1J104D	CHIP R	100K	D	1/16W	
R129			RK73HB1J473J	CHIP R	47K	J	1/16W	
R130			RK73EB2ER39K	CHIP R	0.39	K	1/4W	
R132,133			RK73HH1J154D	CHIP R	150K	D	1/16W	
R134			R92-1368-05	CHIP R	0 OHM			
R135			RK73HB1J123J	CHIP R	12K	J	1/16W	
R137-140			RK73HH1J154D	CHIP R	150K	D	1/16W	
R141			RK73HB1J103J	CHIP R	10K	J	1/16W	
R142			RK73HB1J473J	CHIP R	47K	J	1/16W	
R143			R92-1368-05	CHIP R	0 OHM			
R144			RK73HB1J105J	CHIP R	1.0M	J	1/16W	
R145			RK73HB1J222J	CHIP R	2.2K	J	1/16W	
R146,147			RK73HB1J104J	CHIP R	100K	J	1/16W	
R148,149			RK73HB1J271J	CHIP R	270	J	1/16W	
R150			R92-1252-05	CHIP R	0 OHM	J	1/16W	
R152			R92-1368-05	CHIP R	0 OHM			
R153			RK73HB1J393J	CHIP R	39K	J	1/16W	
R200			RK73HB1J824J	CHIP R	820K	J	1/16W	
R202			RK73HB1J224J	CHIP R	220K	J	1/16W	
R203			RK73HB1J334J	CHIP R	330K	J	1/16W	
R204			RK73HB1J104J	CHIP R	100K	J	1/16W	
R205			RK73HB1J472J	CHIP R	4.7K	J	1/16W	
R206			RK73HB1J152J	CHIP R	1.5K	J	1/16W	
R207			R92-1368-05	CHIP R	0 OHM			
R208,209			RK73HB1J223J	CHIP R	22K	J	1/16W	
R210			RK73HB1J332J	CHIP R	3.3K	J	1/16W	
R211,212			RK73HB1J223J	CHIP R	22K	J	1/16W	
R213			RK73HB1J102J	CHIP R	1.0K	J	1/16W	
R214			RK73HB1J334J	CHIP R	330K	J	1/16W	
R215			RK73HB1J472J	CHIP R	4.7K	J	1/16W	
R216			RK73HB1J153J	CHIP R	15K	J	1/16W	
R217			RK73HB1J184J	CHIP R	180K	J	1/16W	
R218			RK73HB1J273J	CHIP R	27K	J	1/16W	
R219			RK73GB1J184J	CHIP R	180K	J	1/16W	
R220			RK73HB1J184J	CHIP R	180K	J	1/16W	

Ref. No.	Address	New parts	Parts No.	Description				Desti-nation
R221			RK73GB1J332J	CHIP R	3.3K	J	1/16W	
R222			RK73HB1J272J	CHIP R	2.7K	J	1/16W	
R223			RK73HB1J474J	CHIP R	470K	J	1/16W	
R224			RK73HB1J392J	CHIP R	3.9K	J	1/16W	
R225			RK73HB1J100J	CHIP R	10	J	1/16W	
R226			RK73HB1J562J	CHIP R	5.6K	J	1/16W	
R227			R92-1368-05	CHIP R	0 OHM			
R228			RK73HB1J221J	CHIP R	220	J	1/16W	
R230			RK73HB1J564J	CHIP R	560K	J	1/16W	
R231			RK73HB1J181J	CHIP R	180	J	1/16W	
R232			RK73HB1J221J	CHIP R	220	J	1/16W	
R233			RK73HB1J472J	CHIP R	4.7K	J	1/16W	
R234			RK73HB1J470J	CHIP R	47	J	1/16W	
R235			RK73HB1J100J	CHIP R	10	J	1/16W	
R236			RK73HB1J681J	CHIP R	680	J	1/16W	
R237			RK73HB1J560J	CHIP R	56	J	1/16W	
R239-242			RK73HB1J823J	CHIP R	82K	J	1/16W	
R243			R92-1252-05	CHIP R	0 OHM	J	1/16W	
R245,246			RK73HB1J105J	CHIP R	1.0M	J	1/16W	
R248			RK73HB1J680J	CHIP R	68	J	1/16W	
R249			RK73HB1J221J	CHIP R	220	J	1/16W	
R251			RK73HB1J104J	CHIP R	100K	J	1/16W	
R253			RK73HB1J184J	CHIP R	180K	J	1/16W	
R254			RK73HB1J224J	CHIP R	220K	J	1/16W	
R255			RK73HB1J104J	CHIP R	100K	J	1/16W	
R256,257			RK73HB1J105J	CHIP R	1.0M	J	1/16W	
R262-265			R92-1368-05	CHIP R	0 OHM			
R266			RK73HB1J102J	CHIP R	1.0K	J	1/16W	
R400			R92-1368-05	CHIP R	0 OHM			
R402			RK73HB1J821J	CHIP R	820	J	1/16W	
R403			RK73HB1J561J	CHIP R	560	J	1/16W	
R404			RK73HB1J103J	CHIP R	10K	J	1/16W	
R405			RK73HB1J104J	CHIP R	100K	J	1/16W	
R406			RK73HB1J224J	CHIP R	220K	J	1/16W	
R407			RK73HB1J684J	CHIP R	680K	J	1/16W	
R408,409			RK73HB1J474J	CHIP R	470K	J	1/16W	
R410			RK73HB1J103J	CHIP R	10K	J	1/16W	
R411,412			RK73HH1J474D	CHIP R	470K	D	1/16W	
R414			RK73HB1J103J	CHIP R	10K	J	1/16W	
R415			RK73HB1J153J	CHIP R	15K	J	1/16W	
R416			R92-1368-05	CHIP R	0 OHM			
R417			RK73HB1J684J	CHIP R	680K	J	1/16W	
R418			RK73HB1J474J	CHIP R	470K	J	1/16W	
R419			RK73HB1J105J	CHIP R	1.0M	J	1/16W	
R421			RK73HB1J102J	CHIP R	1.0K	J	1/16W	
R422			RK73HB1J472J	CHIP R	4.7K	J	1/16W	
R423,424			RK73HB1J103J	CHIP R	10K	J	1/16W	
R425-427			RK73HB1J473J	CHIP R	47K	J	1/16W	
R428			RK73HB1J124J	CHIP R	120K	J	1/16W	
R430			RK73HB1J103J	CHIP R	10K	J	1/16W	
R500			R92-1368-05	CHIP R	0 OHM			
R504			R92-1368-05	CHIP R	0 OHM			
R505,506			RK73HB1J473J	CHIP R	47K	J	1/16W	
R507			RK73HB1J474J	CHIP R	470K	J	1/16W	
R508-510			RK73HB1J473J	CHIP R	47K	J	1/16W	
R511			R92-1368-05	CHIP R	0 OHM			
R512			RK73HB1J473J	CHIP R	47K	J	1/16W	
R513			RK73HB1J102J	CHIP R	1.0K	J	1/16W	
R514			RK73HB1J472J	CHIP R	4.7K	J	1/16W	
R515			RK73HB1J473J	CHIP R	47K	J	1/16W	

PARTS LIST

TX-RX UNIT (X57-6930-10)

Ref. No.	Address	New parts	Parts No.	Description				Desti-nation
R516,517			RK73HB1J102J	CHIP R	1.0K	J	1/16W	
R518			RK73HB1J103J	CHIP R	10K	J	1/16W	
R519			RK73HB1J474J	CHIP R	470K	J	1/16W	
R520			RK73HB1J103J	CHIP R	10K	J	1/16W	
R521			RK73HH1J272D	CHIP R	2.7K	D	1/16W	
R522		*	RK73HH1J512D	CHIP R	5.1K	D	1/16W	
R523,524			R92-1368-05	CHIP R	0 OHM			
R525			RK73HB1J102J	CHIP R	1.0K	J	1/16W	
R526			R92-1252-05	CHIP R	0 OHM	J	1/16W	
R527			RK73HB1J473J	CHIP R	47K	J	1/16W	
R528			RK73HB1J474J	CHIP R	470K	J	1/16W	
R600			RK73HB1J684J	CHIP R	680K	J	1/16W	
R601			RK73HB1J394J	CHIP R	390K	J	1/16W	
R603			R92-1368-05	CHIP R	0 OHM			
R604			RK73HB1J184J	CHIP R	180K	J	1/16W	
R605			RK73HB1J393J	CHIP R	39K	J	1/16W	
R606			RK73HB1J184J	CHIP R	180K	J	1/16W	
R607			RK73HB1J223J	CHIP R	22K	J	1/16W	
R609			RK73HB1J104J	CHIP R	100K	J	1/16W	
R612			RK73HB1J103J	CHIP R	10K	J	1/16W	
R613			RK73HB1J104J	CHIP R	100K	J	1/16W	
R614			RK73HB1J683J	CHIP R	68K	J	1/16W	
R615			R92-1368-05	CHIP R	0 OHM			
R616			RK73HB1J104J	CHIP R	100K	J	1/16W	
R617			RK73HB1J683J	CHIP R	68K	J	1/16W	
R618			R92-1368-05	CHIP R	0 OHM			
R619			RK73HB1J394J	CHIP R	390K	J	1/16W	
R623			RK73HB1J104J	CHIP R	100K	J	1/16W	
R624			R92-1368-05	CHIP R	0 OHM			
R625			RK73HB1J472J	CHIP R	4.7K	J	1/16W	
R626			RK73HB1J184J	CHIP R	180K	J	1/16W	
R627			RK73HB1J684J	CHIP R	680K	J	1/16W	
R628,629			R92-1368-05	CHIP R	0 OHM			
R631			RK73HB1J474J	CHIP R	470K	J	1/16W	
R633			RK73HB1J105J	CHIP R	1.0M	J	1/16W	
R635,636			RK73HB1J472J	CHIP R	4.7K	J	1/16W	
R637			RK73HB1J332J	CHIP R	3.3K	J	1/16W	
R638			RK73HB1J103J	CHIP R	10K	J	1/16W	
R641			RK73HB1J273J	CHIP R	27K	J	1/16W	
R642			RK73HB1J472J	CHIP R	4.7K	J	1/16W	
R643			RK73HB1J104J	CHIP R	100K	J	1/16W	
R644			RK73HB1J103J	CHIP R	10K	J	1/16W	
R645			RK73HB1J472J	CHIP R	4.7K	J	1/16W	
R648			RK73HB1J104J	CHIP R	100K	J	1/16W	
R650			RK73HB1J472J	CHIP R	4.7K	J	1/16W	
R652			RK73HB1J103J	CHIP R	10K	J	1/16W	
R654			RK73HB1J683J	CHIP R	68K	J	1/16W	
R655			RK73HB1J682J	CHIP R	6.8K	J	1/16W	
R656			RK73HB1J563J	CHIP R	56K	J	1/16W	
R657			RK73HB1J564J	CHIP R	560K	J	1/16W	
R658			RK73HB1J473J	CHIP R	47K	J	1/16W	
R659			R92-1252-05	CHIP R	0 OHM	J	1/16W	
R660			R92-1368-05	CHIP R	0 OHM			
R661			RK73HB1J334J	CHIP R	330K	J	1/16W	
R663			RK73HB1J103J	CHIP R	10K	J	1/16W	
R664			RK73HB1J124J	CHIP R	120K	J	1/16W	
R666			RK73HB1J105J	CHIP R	1.0M	J	1/16W	
R667			RK73HB1J394J	CHIP R	390K	J	1/16W	
R668			RK73HB1J154J	CHIP R	150K	J	1/16W	
R669			RK73HB1J124J	CHIP R	120K	J	1/16W	

Ref. No.	Address	New parts	Parts No.	Description				Desti-nation
R670			R92-1252-05	CHIP R	0 OHM	J	1/16W	
R671			RK73HB1J104J	CHIP R	100K	J	1/16W	
R672			RK73HB1J224J	CHIP R	220K	J	1/16W	
R673,674			R92-1368-05	CHIP R	0 OHM			
R675			RK73HB1J105J	CHIP R	1.0M	J	1/16W	
R676			RK73HB1J274J	CHIP R	270K	J	1/16W	
R677			RK73HB1J223J	CHIP R	22K	J	1/16W	
R679			R92-1368-05	CHIP R	0 OHM			
R680			RK73HB1J274J	CHIP R	270K	J	1/16W	
R681			RK73HB1J102J	CHIP R	1.0K	J	1/16W	
R682			RK73HB1J272J	CHIP R	2.7K	J	1/16W	
R683			RK73HB1J154J	CHIP R	150K	J	1/16W	
R684			R92-1252-05	CHIP R	0 OHM	J	1/16W	
R685			RK73HB1J472J	CHIP R	4.7K	J	1/16W	
R686			RK73HB1J824J	CHIP R	820K	J	1/16W	
R687			RK73HB1J105J	CHIP R	1.0M	J	1/16W	
R688			RK73HB1J273J	CHIP R	27K	J	1/16W	
R689			R92-1368-05	CHIP R	0 OHM			
R691			RK73HB1J103J	CHIP R	10K	J	1/16W	
R692			RK73HB1J823J	CHIP R	82K	J	1/16W	
R693			RK73HB1J472J	CHIP R	4.7K	J	1/16W	
R694			RK73HB1J104J	CHIP R	100K	J	1/16W	
R695			RK73HB1J103J	CHIP R	10K	J	1/16W	
R696			RK73HB1J184J	CHIP R	180K	J	1/16W	
R697			RK73HB1J474J	CHIP R	470K	J	1/16W	
R698			RK73HB1J105J	CHIP R	1.0M	J	1/16W	
R699			RK73HB1J334J	CHIP R	330K	J	1/16W	
R700			RK73HB1J184J	CHIP R	180K	J	1/16W	
R701			RK73HB1J223J	CHIP R	22K	J	1/16W	
R702,703			RK73HB1J473J	CHIP R	47K	J	1/16W	
R704			RK73HB1J471J	CHIP R	470	J	1/16W	
R705,706			RK73HB1J153J	CHIP R	15K	J	1/16W	
R707			RK73HB1J182J	CHIP R	1.8K	J	1/16W	
R708			RK73HB1J102J	CHIP R	1.0K	J	1/16W	
R709			RK73HB1J104J	CHIP R	100K	J	1/16W	
R710			RK73HB1J102J	CHIP R	1.0K	J	1/16W	
R711			RK73HB1J473J	CHIP R	47K	J	1/16W	
R712			RK73HB1J104J	CHIP R	100K	J	1/16W	
R713			RK73HB1J102J	CHIP R	1.0K	J	1/16W	
R714			RK73HB1J104J	CHIP R	100K	J	1/16W	
R715			RK73HB1J272J	CHIP R	2.7K	J	1/16W	
R716			RK73HB1J104J	CHIP R	100K	J	1/16W	
R717-720			RK73HB1J101J	CHIP R	100	J	1/16W	
R721			RK73HB1J103J	CHIP R	10K	J	1/16W	
R722			RK73HB1J474J	CHIP R	470K	J	1/16W	
R723			RK73HB1J470J	CHIP R	47	J	1/16W	
R724			RK73HB1J102J	CHIP R	1.0K	J	1/16W	
R725,726			RK73HB1J331J	CHIP R	330	J	1/16W	
R728-734			RK73HB1J102J	CHIP R	1.0K	J	1/16W	
R735			RK73HB1J473J	CHIP R	47K	J	1/16W	
R736,737			RK73HB1J472J	CHIP R	4.7K	J	1/16W	
R738			RK73HB1J124J	CHIP R	120K	J	1/16W	
R739			RK73HB1J184J	CHIP R	180K	J	1/16W	
R740,741			RK73HB1J123J	CHIP R	12K	J	1/16W	
R742			RK73HB1J822J	CHIP R	8.2K	J	1/16W	
R744			RK73HB1J472J	CHIP R	4.7K	J	1/16W	
R745			RK73HB1J823J	CHIP R	82K	J	1/16W	
R747			R92-1368-05	CHIP R	0 OHM			
R748			RK73HB1J104J	CHIP R	100K	J	1/16W	
R750			RK73HB1J823J	CHIP R	82K	J	1/16W	

PARTS LIST

TX-RX UNIT (X57-6930-10)

Ref. No.	Address	New parts	Parts No.	Description	Destination
R752			R92-1368-05	CHIP R 0 OHM	
R753			RK73HB1J103J	CHIP R 10K J 1/16W	
R754			RK73HB1J472J	CHIP R 4.7K J 1/16W	
R755			R92-1252-05	CHIP R 0 OHM J 1/16W	
R758			RK73HB1J473J	CHIP R 47K J 1/16W	
R760			RK73HB1J104J	CHIP R 100K J 1/16W	
R761			RK73HB1J222J	CHIP R 2.2K J 1/16W	
R762			RK73HB1J472J	CHIP R 4.7K J 1/16W	
R764,765			R92-1252-05	CHIP R 0 OHM J 1/16W	
R766			RK73HB1J222J	CHIP R 2.2K J 1/16W	
R767			RK73HB1J474J	CHIP R 470K J 1/16W	
R768			RK73HB1J101J	CHIP R 100 J 1/16W	
R769-771			RK73HB1J102J	CHIP R 1.0K J 1/16W	
R772			R92-1368-05	CHIP R 0 OHM	
R773			RK73HB1J823J	CHIP R 82K J 1/16W	
R775			RK73HB1J563J	CHIP R 56K J 1/16W	
R776			RK73HB1J473J	CHIP R 47K J 1/16W	
R777			RK73HB1J100J	CHIP R 10 J 1/16W	
R780			RK73HB1J103J	CHIP R 10K J 1/16W	
R781,782			R92-1368-05	CHIP R 0 OHM	
R783			RK73HB1J563J	CHIP R 56K J 1/16W	
R784			RK73HB1J473J	CHIP R 47K J 1/16W	
R785			RK73HH1J123D	CHIP R 12K D 1/16W	
R786		✻	RK73HH1J562D	CHIP R 5.6K D 1/16W	
R787			RK73HH1J822D	CHIP R 8.2K D 1/16W	
R788			RK73HB1J473J	CHIP R 47K J 1/16W	
R790			R92-1368-05	CHIP R 0 OHM	
R792			RK73HB1J223J	CHIP R 22K J 1/16W	
R794			R92-1368-05	CHIP R 0 OHM	
R796			R92-1252-05	CHIP R 0 OHM J 1/16W	
S400			S70-0483-05	TACT SWITCH	
D1-4			HVC131	DIODE	
D5		✻	1SV323	VARIABLE CAPACITANCE DIODE	
D7		✻	1SV323	VARIABLE CAPACITANCE DIODE	
D9			1SV325	VARIABLE CAPACITANCE DIODE	
D10,11		✻	1SV323	VARIABLE CAPACITANCE DIODE	
D13			1SV325	VARIABLE CAPACITANCE DIODE	
D17			1SV278	VARIABLE CAPACITANCE DIODE	
D18			MA2S111	DIODE	
D100			HSC277	DIODE	
D103			HZU4BLL	ZENER DIODE	
D106,107			HVC131	DIODE	
D108			HZU2ALL	ZENER DIODE	
D200			MA2S111	DIODE	
D201			DAN222	DIODE	
D202			RB706F-40	DIODE	
D203			DAN222	DIODE	
D204			MA2S111	DIODE	
D205			HSC277	DIODE	
D207-210			1SV305	VARIABLE CAPACITANCE DIODE	
D211			HVC131	DIODE	
D213			HVC131	DIODE	
D314			MA2S111	DIODE	
D402			1SR154-400	DIODE	
D403			1SS301	DIODE	
D404			MA2S111	DIODE	
D405			RB521S-30	DIODE	
D406			MA2S111	DIODE	
D408			MA2S111	DIODE	

Ref. No.	Address	New parts	Parts No.	Description	Destination
D500			MA2S111	DIODE	
D501,502			1SS388	DIODE	
D600-603			RB706F-40	DIODE	
D604			015AZ6.8	ZENER DIODE	
D605			1SS373	DIODE	
D606			015AZ6.8	ZENER DIODE	
D607			015AZ2.4-X	ZENER DIODE	
D608			015AZ6.8	ZENER DIODE	
D609,610			DA221	DIODE	
D611			NNCD6.8G	ZENER DIODE	
D612			015AZ6.8	ZENER DIODE	
D613			DA221	DIODE	
D614			DAN222	DIODE	
IC1			ADF4111BCP7	MOS IC	
IC100			TA75W01FU	MOS IC	
IC200			TA31136FN	MOS IC	
IC400		✻	XC61CC5602NR	MOS IC	
IC401			TK11250CUCB	MOS IC	
IC402,403			XC6204B502MR	MOS IC	
IC404			TC75S51FE	MOS IC	
IC405			S-80942CNNBG9C	MOS IC	
IC406			TK11250CUCB	MOS IC	
IC500			AT29C040A-90TI	ROM IC	
IC502		✻	30625MGP-169GP	MPU	
IC503			RV5C386A	MOS IC	
IC504			AT24256N10SI27	ROM IC	
IC505		✻	TC7W53FK	HYBRID IC	
IC600-604			TC75W51FK	MOS IC	
IC605			M62364FP	MOS IC	
IC606			TC7W53FK	HYBRID IC	
IC607			AQUA-L	MOS IC	
IC608			TC75W51FK	MOS IC	
IC609			TDA7053AT	BI-POLAR IC	
Q1			DTC144EE	DIGITAL TRANSISTOR	
Q2			2SC5108(Y)	TRANSISTOR	
Q6,7			2SK508NV(K52)	FET	
Q8,9			2SJ347	FET	
Q10			2SC5108(Y)	TRANSISTOR	
Q11			2SC4617(S)	TRANSISTOR	
Q12			2SK1830	FET	
Q13			2SC5108(Y)	TRANSISTOR	
Q14			DTA144EE	DIGITAL TRANSISTOR	
Q101			2SK3077	FET	
Q102			2SK2596	FET	
Q104			2SC4738(GR)	TRANSISTOR	
Q105			2SK2595	FET	
Q106			DTC114EE	DIGITAL TRANSISTOR	
Q107,108			2SK1824	FET	
Q200			HN1L02FU	FET	
Q201			2SC4617(S)	TRANSISTOR	
Q202			2SJ243	FET	
Q203			2SK1824	FET	
Q204			DTA144EE	DIGITAL TRANSISTOR	
Q205			2SC4649(N,P)	TRANSISTOR	
Q206			3SK318	FET	
Q207			3SK294	FET	
Q400			UMG9N	TRANSISTOR	
Q401			SSM3K15TE	FET	
Q402			2SK1830	FET	
Q403			2SA1955(A)	TRANSISTOR	

PARTS LIST

TX-RX UNIT (X57-6930-10)

Ref. No.	Address	New parts	Parts No.	Description	Desti-nation
Q404			DTC144EE	DIGITAL TRANSISTOR	
Q405			2SJ347	FET	
Q406			2SA1955(A)	TRANSISTOR	
Q407			2SK1830	FET	
Q408			2SA1955(A)	TRANSISTOR	
Q409			2SJ347	FET	
Q502			SSM3K15TE	FET	
Q602			DTA114EE	DIGITAL TRANSISTOR	
Q605			RN4910	TRANSISTOR	
Q606			2SC4738(GR)	TRANSISTOR	
Q607			2SA1832(GR)	TRANSISTOR	
Q608-610			2SJ243	FET	
Q611			HN1L02FU	FET	
Q612			2SC4617(S)	TRANSISTOR	
Q613			2SB1132(Q,R)	TRANSISTOR	
Q614			2SJ347	FET	
Q615			2SC4617(S)	TRANSISTOR	
Q616,617			UPA672T	FET	
Q618			2SK1824	FET	
Q619			2SJ243	FET	
Q620			DTA144TE	DIGITAL TRANSISTOR	
Q621			2SC4649(N,P)	TRANSISTOR	
Q622			FMMT717	TRANSISTOR	
Q623,624			2SK1830	FET	
TH100			ERTJ0EV104H	THERMISTOR	
TH200			ERTJ0EV104H	THERMISTOR	

Ref. No.	Address	New parts	Parts No.	Description	Desti-nation

EXPLODED VIEW

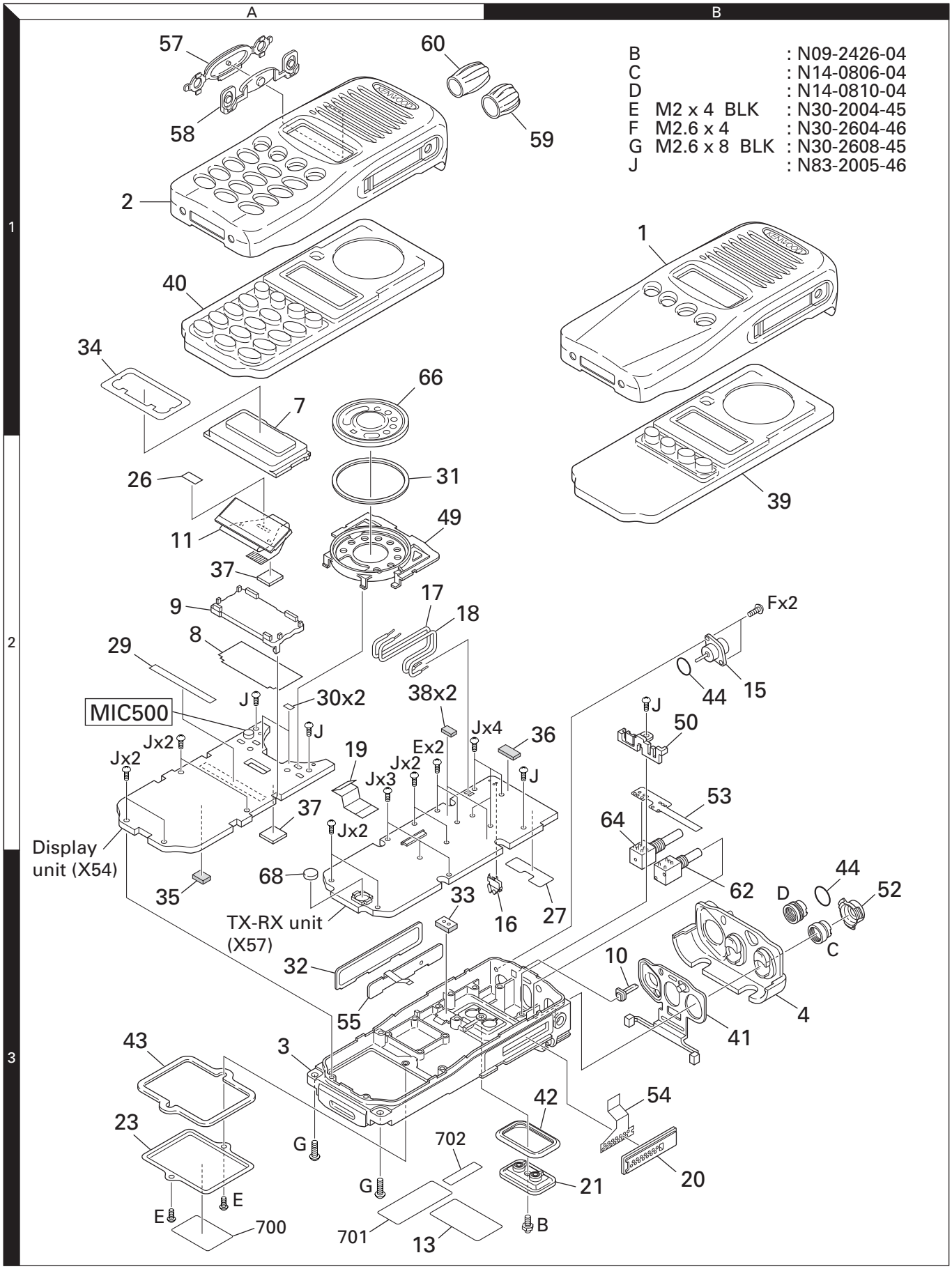

Parts with the exploded numbers larger than 700 are not supplied.

PACKING

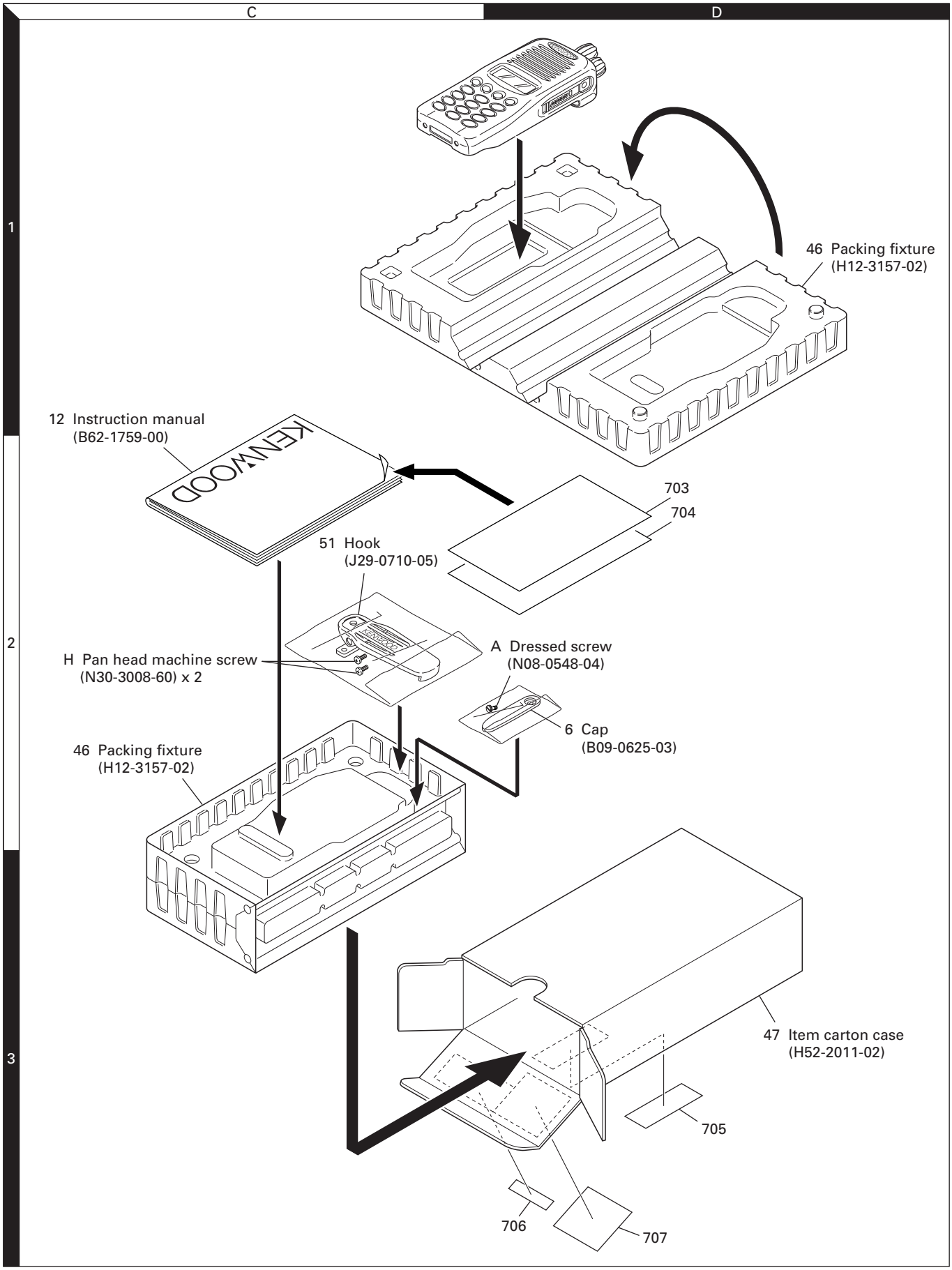

Parts with the exploded numbers larger than 700 are not supplied.

ADJUSTMENT

Controls

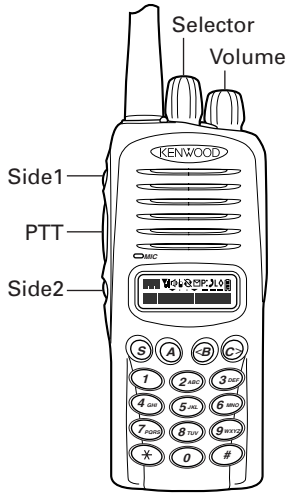

Panel Test Mode

■ Test mode operation features

This transceiver has a test mode. ***To enter test mode, press [A] key and turn power on. Hold [A] key until frequency version appears on LCD.*** Test mode can be inhibited by programming. To exit test mode, switch the power on again. The following functions are available in test mode.

■ Key operation

Key	"FNC" not appears	
	Function	Display
[S]	Shifts to Panel tuning mode	-
[A]	Function on	"FNC" appears
[B]	MSK 1200bps and 2400bps	2400bps : ✉ icon appears
[C]	Test signaling CH up	Signalling No.
[Selector]	Test frequency CH up/down	Channel No.
[Side1]	Squelch on/off	🔈
[Side2]	Narrow/Wide 4k/Wide 5k	Narrow : "n", Wide 4k : "s", Wide 5k : "w"
[PTT]	Transmit	-
[0] to [9] and [#],[*]	Use as the DTMF keypad. If a key is pressed during transmission, the DTMF corresponding to the key that was presses is sent.	-

Key	"FNC" appears	
	Function	Display
[S]	High power / Low power	Low : L icon appears
[A]	Function off	-
[B]	Compander on/off	On : icon appears
[C]	Beat shift on/off	On : ◊ icon appears
[Selector]	Test frequency CH up/down	-
[Side1]	Squelch level 0	On : P icon appears
[Side2]	LCD all lights	LCD all point appears
[PTT]	Transmit	-
[0] to [9] and [#],[*]	Function off	-

Notes :

- If a [S], [A], [B], [C] key is pressed during transmission, the DTMF corresponding to the key that was pressed is sent.
- The "Wide 4k" can not use, please skip it.

• LED indicator

Red LED — Lights during transmission. Blinks at the low battery voltage warning.

Green LED — Lights when there is carrier.

• Sub LCD indicator

"FNC" — Appears at function on.

• LCD display in panel test mode

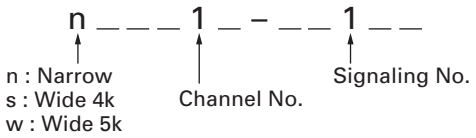

■ Frequency and Signaling

The set has been adjusted for the frequencies shown in the following table. When required, readjust them following the adjustment procedure to obtain the frequencies you want in actual operation.

• Test frequency

CH	RX (MHz)	TX (MHz)
1	155.05000	155.10000
2	136.05000	136.10000
3	173.95000	173.90000
4	155.00000	155.00000
5	155.20000	155.20000
6	155.40000	155.40000
7	177.95000	177.90000
8~16	-	-

ADJUSTMENT

• **Test signaling**

No.	RX	TX
1	None	None
2	None	100Hz Square Wave
3	LTR Data : AREA=0, GOTO=12 HOME=12 ID=47, FREE=25	LTR Data : AREA=0, GOTO=12 HOME=12 ID=47, FREE=25
4	QT : 67.0Hz	QT : 67.0Hz
5	QT : 151.4Hz	QT : 151.4Hz
6	QT : 210.7Hz	QT : 210.7Hz
7	QT : 254.1Hz	QT : 254.1Hz
8	DQT : 023N	DQT : 023N
9	DQT : 754I	DQT : 754I
10	DTMF : 159D	DTMF : 159D
11	None	DTMF Code 9
12	2-tone : A : 304.7Hz B : 3106.0Hz	2-tone : A : 304.7Hz B : 3106.0Hz
13	Single Tone : 979.9Hz	Single Tone : 979.9Hz
14	None	Single Tone : 1000Hz
15	5-tone (CCIR 12345)	5-tone (CCIR 12345)
16	None	MSK
17	MSK : Preamble : 0xAAAA Sync : 0x23EB Data : 0x230960C6AAAA CRC : 0xC4D7	MSK : Preamble : 0xAAAA Sync : 0x23EB Data : 0x230960C6AAAA CRC : 0xC4D7

Note : The "5-tone signaling" can not use, please skip it.

Panel Tuning Mode

■ Preparations for tuning the transceiver

Before attempting to tune the transceiver, connect the unit to a suitable power supply.

Whenever the transmitter is turned, the unit must be connected to a suitable dummy load (i.e. power meter).

The speaker output connector must be terminated with a 8Ω dummy load and connected to an AC voltmeter and an audio distortion meter or a SINAD measurement meter at all times during tuning.

■ Transceiver tuning
(To place transceiver in tuning mode)

Press [S] key, now in tuning mode. Use [B] key to write tuning data through tuning modes, and [Selector] to adjust tuning requirements (1 to 256 appeares on LCD).

Use [C] key to select the adjustment item through tuning modes. Use [A] key to adjust 3 or 5 reference level adjustments, and use [Side2] key to switch between Wide 5k/Wide 4k/Narrow.

Channel appears on LCD. Set channel according to tuning requirements.

• **LCD display in panel tuning mode**

n __ B A L ___ 2 5 6

n : Narrow
s : Wide 4k
w : Wide 5k

Adjustment item

Adjustment value (1~256)

■ Key operation

Key	Function	
	Push	Hold (1 second)
[S]	End of panel tuning mode	-
[A]	To enter 3 or 5 reference level adjustments	-
[B]	Writes the adjustment value	-
[C]	Go to next adjustment item	Back to last adjustment item
[Selector]	Adjustment value up/down	
[Volume]	Volume level up/down	
[Side1]	Squelch on/off	-
[Side2]	Selects Narrow, Wide 4k, Wide 5k	-

■ 3 or 5 reference level adjustments frequency

Tuning point	RX (MHz)	TX (MHz)
Low	136.05000	136.10000
Low'	145.55000	145.60000
Center	155.05000	155.10000
High'	164.55000	164.60000
High	173.95000	173.90000

■ Adjustment item and Display (✳✳✳ : 1~256)

Order	Adjustment item	Display
1	Frequency	FREQ ✳✳✳
2	Shift 1	SHFT1 ✳✳✳
3	Shift 2	SHFT2 ✳✳✳
4	High power	HPWR ✳✳✳
5	Low power	LPWR ✳✳✳
6	Balance	BAL ✳✳✳
7	Max deviation	DEV ✳✳✳
8	VOX 1	VOX1 ✳✳✳
9	VOX 10	VOX10 ✳✳✳
10	QT	QT ✳✳✳
11	DQT	DQT ✳✳✳
12	LTR	LTR ✳✳✳
13	DTMF	DTMF ✳✳✳
14	MSK	MSK ✳✳✳
15	Tone	TONE ✳✳✳
16	Sensitivity 1	SENS1 ✳✳✳
17	Sensitivity 2	SENS2 ✳✳✳
18	Squelch	SQL ✳✳✳
19	Low RSSI	LRSSI ✳✳✳
20	Squelch tight	SQLT ✳✳✳
21	High RSSI	HRSSI ✳✳✳
22	Battery	BATT ✳✳✳

ADJUSTMENT

■ Flow chart

Note : The "Wide 4k" can not use, please skip it.

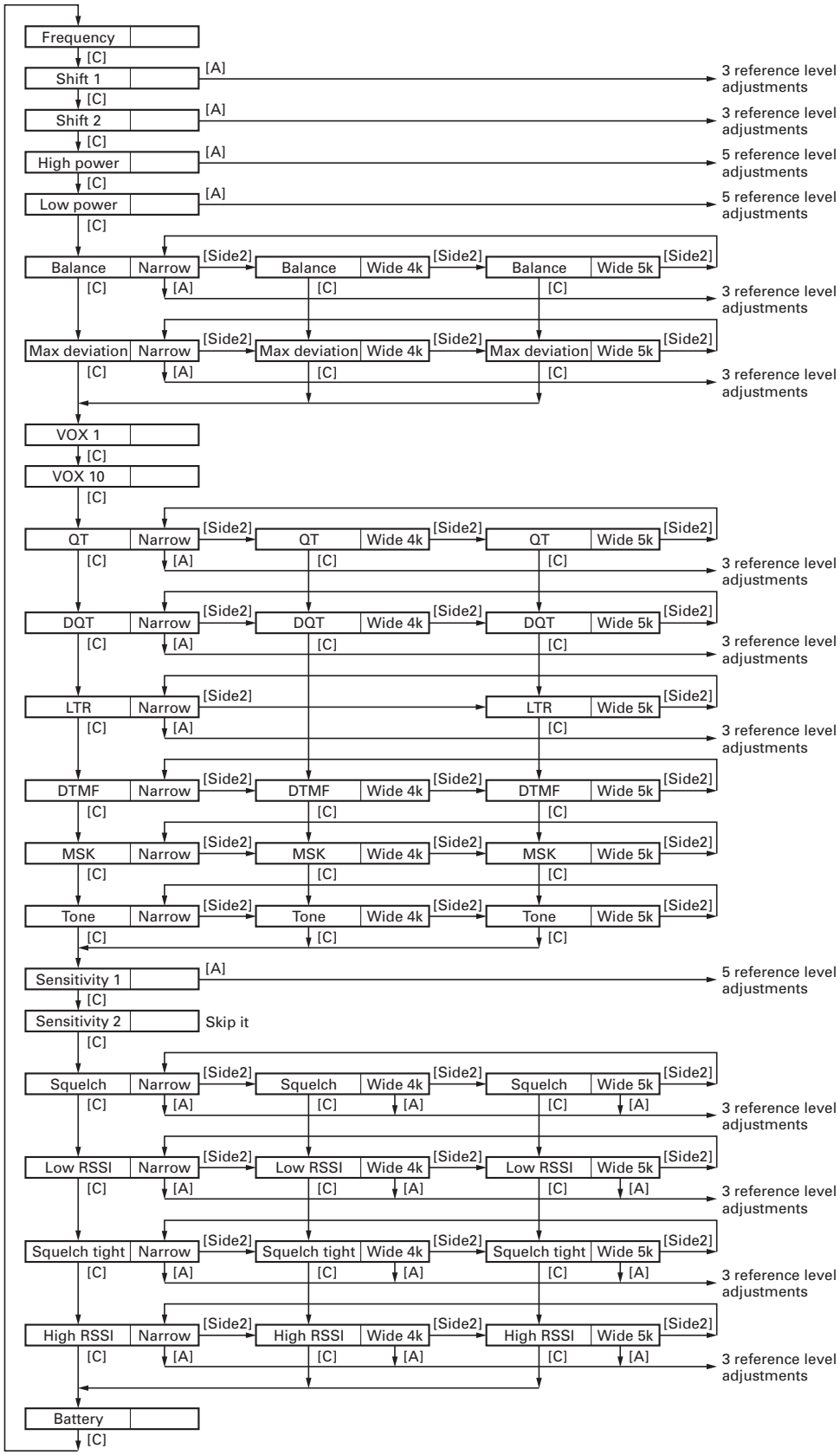

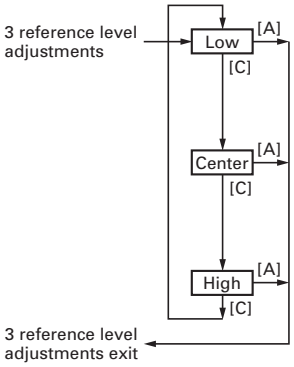

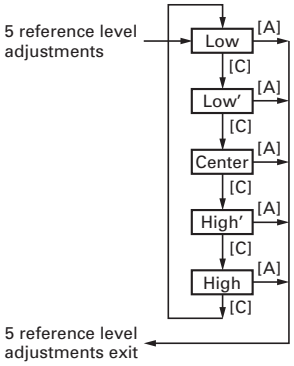

ADJUSTMENT

Test Equipment Required for Alignment

Test Equipment	Major Specifications	
1. Standard Signal Generator (SSG)	Frequency Range	136 to 174MHz
	Modulation	Frequency modulation and external modulation
	Output	–127dBm/0.1μV to greater than –47dBm/1mV
2. Power Meter	Input Impedance	50Ω
	Operation Frequency	136 to 174MHz or more
	Measurement Capability	Vicinity of 10W
3. Deviation Meter	Frequency Range	136 to 174MHz
4. Digital Volt Meter (DVM)	Measuring Range	10mV to 10V DC
	Input Impedance	High input impedance for minimum circuit loading
5. Oscilloscope		DC through 30MHz
6. High Sensitivity Frequency Counter	Frequency Range	10Hz to 1000MHz
	Frequency Stability	0.2ppm or less
7. Ammeter		5A
8. AF Volt Meter (AF VTVM)	Frequency Range	50Hz to 10kHz
	Voltage Range	1mV to 10V
9. Audio Generator (AG)	Frequency Range	50Hz to 5kHz or more
	Output	0 to 1V
10. Distortion Meter	Capability	3% or less at 1kHz
	Input Level	50mV to 10Vrms
11. 8Ω Dummy Load		Approx. 8Ω, 3W
12. Regulated Power Supply		5V to 10V, approx. 5A
		Useful if ammeter equipped

■ Universal connector

Use the interface cable (KPG-36) for PC tuning or the lead wire with plug (E30-3287-18) and screw (N08-0535-08) for panel tuning. Connect the plug to the universal connector of the radio and tighten the screw.

The lead wire with plug (E30-3287-18) and screw (N08-0535-08) terminals are as follows. Numbers are universal connector terminal numbers.

Caution

1. When connecting the plug to the universal connector of the radio, a short circuit may occur. To prevent this, be sure to turn the radio POWER switch off.
2. Since the RX AF output is a BTL output, there is a DC component. Isolate this with a capacitor or transformer as shown in the figure.
3. Do not connect an instrument between red or black and GND.

• Universal connector

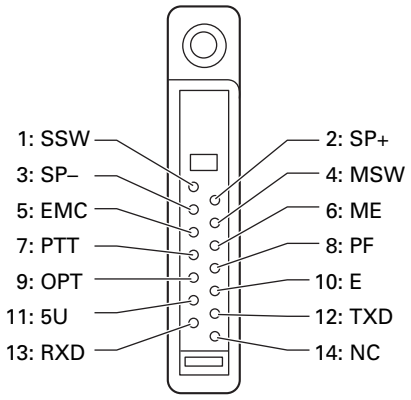

ADJUSTMENT

• Panel tuning

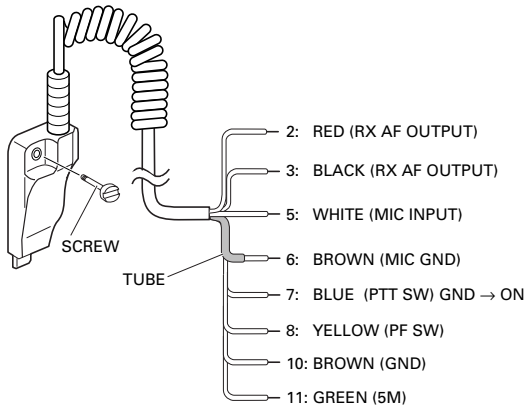

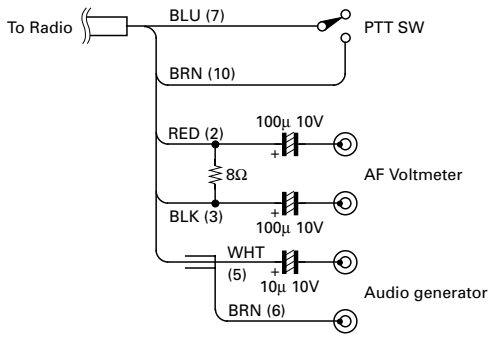

• PC tuning

Connect the wires to the PCB in the connector case of interface cable.

For output the wires out of the connector case, need to process the connector case.

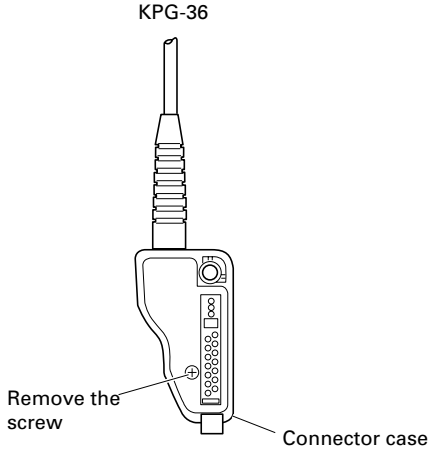

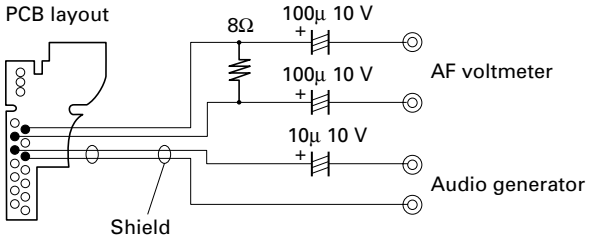

■ Check Jig for the VGS-1

KENWOOD part : W05-1127-00

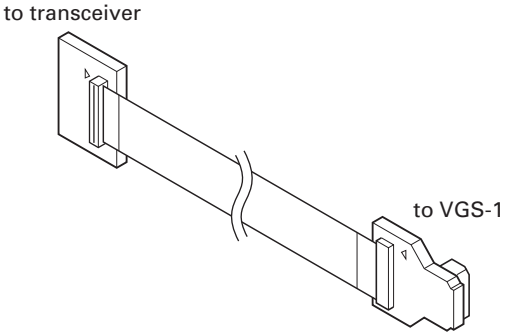

■ Nut wrench

In order to turn the volume nut and the channel selector nut, use a recommendation tool.

KENWOOD part : W05-1123-00

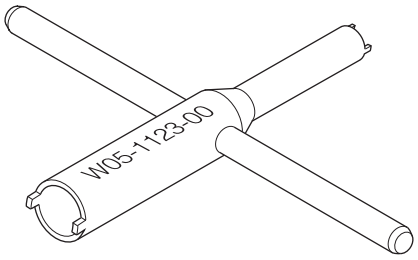

ADJUSTMENT

Common Section

Item	Condition	Measurement			Adjustment			Specifications/Remarks
		Test-equipment	Unit	Terminal	Unit	Parts	Method	
1. Setting	1) BATT terminal voltage : 7.5V 2) SSG standard modulation [Wide 5k] MOD : 1kHz, DEV : 3kHz [Wide 4k] MOD : 1kHz, DEV : 3.4kHz [Narrow] MOD : 1kHz, DEV : 1.5kHz							
2. VCO lock voltage • RX	**[Panel test mode]** 1) CH-Sig : 7-1	Power meter DVM	Panel TX-RX	ANT CV	TX-RX	TC2	4.20V	±0.1V
	2) CH-Sig : 2-1						Check	0.7V or more
• TX	**[Panel tuning mode] LPWR*** 3) CH-Sig : 7-1 PTT : ON				TX-RX	TC1	4.20V	±0.1V
	4) CH-Sig : 2-1 PTT : ON						Check	0.7V or more

* TX can be continued on unlock condition in panel tuning mode.

Transmitter Section (K market model skips adjustment of Wide 4k.)

Item	Condition	Measurement			Adjustment			Specifications/Remarks
		Test-equipment	Unit	Terminal	Unit	Parts	Method	
1. Frequency adjust	1) Adj item : [FREQ] Adjust : [✳✳✳] PTT : ON	f. counter	Panel	ANT	Panel	Selector knob	Center frequency ±40Hz	Note : After replacing the TCXO (X1) align frequency.
2. Frequency shift 1 adjust	1) Adj item : [SHFT1] Adjust : [✳✳✳] 2) Adj item : [L SHFT1] → [C SHFT1] → [H SHFT1] Adjust : [✳✳✳] PTT : ON						[L SHFT1] Low frequency+1.25kHz [C SHFT1] Center frequency+1.25kHz [H SHFT1] High frequency+1.25kHz	±40Hz
3. Frequency shift 2 adjust	1) Adj item : [SHFT2] Adjust : [✳✳✳] 2) Adj item : [L SHFT2] → [C SHFT2] → [H SHFT2] Adjust : [✳✳✳] PTT : ON						[L SHFT2] Low frequency+2.5kHz [C SHFT2] Center frequency+2.5kHz [H SHFT2] High frequency+2.5kHz	±40Hz
4. High power adjust	1) Adj item : [HPWR] Adjust : [✳✳✳] 2) Adj item : [L HPWR] → [L' HPWR] → [C HPWR] → [H' HPWR] → [H HPWR] Adjust : [✳✳✳] PTT : ON	Power meter Ammeter					5.0W	±0.1W 2.0A or less
5. High power check	**[Panel test mode]** 1) CH-Sig : 1-1 PTT : ON						Check	4.5~5.5W 2.1A or less
	2) CH-Sig : 2-1 PTT : ON							
	3) CH-Sig : 3-1 PTT : ON							

ADJUSTMENT

Item	Condition	Measurement			Adjustment			Specifications/Remarks
		Test-equipment	Unit	Terminal	Unit	Parts	Method	
6. Low power adjust	1) Adj item : [LPWR] Adjust : [✳✳✳] 2) Adj item : [L LPWR] → [L' LPWR] → [C LPWR] → [H' LPWR] → [H LPWR] Adjust : [✳✳✳] PTT : ON	Power meter Ammeter	Panel	ANT	Panel	Selector knob	1.0W	±0.1W 1.0A or less
7. Low power check	**[Panel test mode]** 1) CH-Sig : 1-1 Set low power (Push [S]) PTT : ON						Check	0.7~1.4W 1.2A or less
	2) CH-Sig : 2-1 PTT : ON							
	3) CH-Sig : 3-1 PTT : ON							
8. DQT balance adjust • Narrow	1) Adj item : [n BAL] Adjust : [✳✳✳] Deviation meter filter LPF : 3kHz HPF : OFF 2) Adj item : [nL BAL] → [nC BAL] → [nH BAL] Adjust : [✳✳✳] PTT : ON	Deviation meter Oscilloscope AG AF VTVM	Panel	ANT Universal connector	Panel	Selector knob	Make the demodulation waves into square waves.	
• Wide 4k	3) Adj item : [s BAL] Adjust : [✳✳✳] PTT : ON							
• Wide 5k	4) Adj item : [w BAL] Adjust : [✳✳✳] PTT : ON							
9. Max DEV adjust • Narrow	1) Adj item : [n DEV] Adjust : [✳✳✳] AG : 1kHz/75mV at MIC terminal Deviation meter filter LPF : 15kHz HPF : OFF 2) Adj item : [nL DEV] → [nC DEV] → [nH DEV] Adjust : [✳✳✳] PTT : ON						2.10kHz (According to the larger +, –)	±50Hz
• Wide 4k	3) Adj item : [s DEV] Adjust : [✳✳✳] PTT : ON						3.35kHz (According to the larger +, –)	±50Hz
• Wide 5k	4) Adj item : [w DEV] Adjust : [✳✳✳] PTT : ON						4.20kHz (According to the larger +, –)	±50Hz
10. MIC sensitivity check	**[Panel test mode]** 1) CH-Sig : 1-1 AG : 1kHz/5.0mV at MIC terminal PTT : ON						Check	0.9~1.4kHz (Narrow) 1.3~2.2kHz (Wide 4k) 1.5~2.7kHz (Wide 5k)

ADJUSTMENT

Item	Condition	Measurement			Adjustment			Specifications/Remarks
		Test-equipment	Unit	Terminal	Unit	Parts	Method	
11. VOX1 adjust	1) Adj item : [VOX1] Adjust : [✳✳✳] AG : 1kHz/45mV at MIC terminal	AG	Panel	Universal connector	Panel		After apply signal from AG, press [B] key that numeric will be stored in memory.	
12. VOX10 adjust	1) Adj item : [VOX10] Adjust : [✳✳✳] AG : 1kHz/3mV at MIC terminal							
13. QT deviation adjust • Narrow	1) Remove the panel tuning cable assembly from the universal connector. Adj item : [n QT] Adjust : [✳✳✳] Deviation meter filter LPF : 3kHz HPF : OFF 2) Adj item : [nL QT] → [nC QT] → [nH QT] Adjust : [✳✳✳] PTT : ON	Power meter Deviation meter Oscilloscope AG AF VTVM	Panel	ANT Universal connector	Panel	Selector knob	0.35kHz	±50Hz
• Wide 4k	3) Adj item : [s QT] Adjust : [✳✳✳] PTT : ON						0.60kHz	±50Hz
• Wide 5k	4) Adj item : [w QT] Adjust : [✳✳✳] PTT : ON						0.75kHz	±50Hz
14. DQT deviation adjust • Narrow	1) Adj item : [n DQT] Adjust : [✳✳✳] Deviation meter filter LPF : 3kHz HPF : OFF 2) Adj item : [nL DQT] → [nC DQT] → [nH DQT] Adjust : [✳✳✳] PTT : ON						0.35kHz	±50Hz
• Wide 4k	3) Adj item : [s DQT] Adjust : [✳✳✳] PTT : ON						0.60kHz	±50Hz
• Wide 5k	4) Adj item : [w DQT] Adjust : [✳✳✳] PTT : ON						0.75kHz	±50Hz
15. LTR deviation adjust • Narrow	1) Adj item : [n LTR] Adjust : [✳✳✳] Deviation meter filter LPF : 3kHz HPF : OFF 2) Adj item : [nL LTR] → [nC LTR] → [nH LTR] Adjust : [✳✳✳] PTT : ON						0.75kHz	±0.10kHz
• Wide	3) Adj item : [w LTR] Adjust : [✳✳✳] PTT : ON						1.00kHz	±0.10kHz

ADJUSTMENT

Item	Condition	Measurement			Adjustment			Specifications/Remarks
		Test-equipment	Unit	Terminal	Unit	Parts	Method	
16. DTMF deviation adjust • Narrow	1) Adj item : [n DTMF] Adjust : [∗∗∗] Deviation meter filter LPF : 15kHz HPF : OFF PTT : ON	Power meter Deviation meter Oscilloscope AG AF VTVM	Panel	ANT Universal connector	Panel	Selector knob	1.25kHz	±0.1kHz
• Wide 4k	2) Adj item : [s DTMF] Adjust : [∗∗∗] PTT : ON						2.0kHz	±0.1kHz
• Wide 5k	3) Adj item : [w DTMF] Adjust : [∗∗∗] PTT : ON						2.5kHz	±0.1kHz
17. MSK deviation adjust • Narrow	1) Adj item : [n MSK] Adjust : [∗∗∗] Deviation meter filter LPF : 15kHz HPF : OFF PTT : ON						1.5kHz	±0.1kHz
• Wide 4k	2) Adj item : [s MSK] Adjust : [∗∗∗] PTT : ON						2.4kHz	±0.1kHz
• Wide 5k	3) Adj item : [w MSK] Adjust : [∗∗∗] PTT : ON						3.0kHz	±0.1kHz
18. TONE deviation adjust • Narrow	1) Adj item : [n TONE] Adjust : [∗∗∗] Deviation meter filter LPF : 15kHz HPF : OFF PTT : ON						1.5kHz	±0.1kHz
• Wide 4k	2) Adj item : [s TONE] Adjust : [∗∗∗] PTT : ON						2.4kHz	±0.1kHz
• Wide 5k	3) Adj item : [w TONE] Adjust : [∗∗∗] PTT : ON						3.0kHz	±0.1kHz

ADJUSTMENT

Item	Condition	Measurement			Adjustment			Specifications/Remarks
		Test-equipment	Unit	Terminal	Unit	Parts	Method	
19. BATT detection writing	1) Adj item : [BATT] Adjust : [✳✳✳] PTT : ON	Power meter DVM	Panel	ANT BATT terminal	Panel		After pressing the PTT switch, confirm that one predetermined numeric in the range 1 to 256 appears and then press [B] key. That numeric will be stored in memory.	BATT terminal voltage : 5.8V
20. BATT detection check	**[Panel test mode]** 1) CH-Sig : 1-1 BATT terminal voltage : 6.6V PTT : ON						Check	The transceiver can transmit without causing the LED to blink.
	2) BATT terminal voltage : 5.8V PTT : ON							The transceiver should not transmit and LED blinking.

Receiver Section (K market model skips adjustment of Wide 4k.)

Item	Condition	Measurement			Adjustment			Specifications/Remarks
		Test-equipment	Unit	Terminal	Unit	Parts	Method	
1. Sensitivity adjust	1) Adj item : [SENS1] Adjust : [✳✳✳] 2) Adj item : [L SENS1] → [L' SENS1] → [C SENS1] → [H' SENS1] → [H SENS1] Adjust : [✳✳✳] SSG output : –119dBm (0.25µV) (MOD : 1kHz/±1.5kHz)	SSG AF VTVM Oscilloscope	Panel	ANT Universal connector	Panel	Selector knob	Adjust for 12dB SINAD	Rotate the selector knob and increase the adjustment value starting from "1" to obtain SINAD 12dB. Skip adjustment item of [SENS2].
2. Sensitivity check	**[Panel test mode]** 1) CH-Sig : 1-1 SSG output Wide 5k : –118dBm (0.28µV) (MOD : 1kHz/±3kHz) Narrow : –118dBm (0.28µV) (MOD : 1kHz/±1.5kHz)						Check	12dB SINAD or more
3. Squelch (Preset) adjust • Narrow	1) Adj item : [n SQL] Adjust : [✳✳✳] SSG output : –118dBm (0.28µV) (MOD : 1kHz/±1.5kHz)				Panel	Selector knob	After input signal from SSG, press [B] key. That numeric will be stored in memory.	After adjusting SQL, check SQL open/close. SSG –118dBm : Open SSG OFF : Close [nC SQL] MOD 1kHz/±1.5kHz [sC SQL] MOD 1kHz/±2.4kHz [wC SQL] MOD 1kHz/±3.0kHz
	2) Adj item : [nL SQL] → [nC SQL] → [nH SQL] Adjust : [✳✳✳]							
• Wide 4k	3) Adj item : [s SQL] Adjust : [✳✳✳] SSG output : –118dBm (0.28µV) (MOD : 1kHz/±2.4kHz)							
	4) Adj item : [sL SQL] → [sC SQL] → [sH SQL] Adjust : [✳✳✳]							

ADJUSTMENT

Item	Condition	Measurement			Adjustment			Specifications/Remarks
		Test-equipment	Unit	Terminal	Unit	Parts	Method	
• Wide 5k	5) Adj item : [w SQL] Adjust : [✳✳✳] SSG output : –118dBm (0.28µV) (MOD : 1kHz/±3.0kHz)	SSG AF VTVM Oscilloscope	Panel	ANT Universal connector	Panel	Selector knob	After input signal from SSG, press [B] key. That numeric will be stored in memory.	After adjusting SQL, check SQL open/close. SSG –118dBm : Open SSG OFF : Close [nC SQL] MOD 1kHz/±1.5kHz [sC SQL] MOD 1kHz/±2.4kHz [wC SQL] MOD 1kHz/±3.0kHz
	6) Adj item : [wL SQL] → [wC SQL] → [wH SQL] Adjust : [✳✳✳]							
4. Low RSSI adjust • Narrow	1) Adj item : [n LRSSI] Adjust : [✳✳✳] SSG output : –118dBm (0.28µV) (MOD : 1kHz/±1.5kHz)						After input signal from SSG, press [B] key. That numeric will be stored in memory.	
	2) Adj item : [nL LRSSI] → [nC LRSSI] → [nH LRSSI] Adjust : [✳✳✳]							
• Wide 4k	3) Adj item : [s LRSSI] Adjust : [✳✳✳] SSG output : –118dBm (0.28µV) (MOD : 1kHz/±2.4kHz)							
	4) Adj item : [sL LRSSI] → [sC LRSSI] → [sH LRSSI] Adjust : [✳✳✳]							
• Wide 5k	5) Adj item : [w LRSSI] Adjust : [✳✳✳] SSG output : –118dBm (0.28µV) (MOD : 1kHz/±3.0kHz)							
	6) Adj item : [wL LRSSI] → [wC LRSSI] → [wH LRSSI] Adjust : [✳✳✳]							
5. Squelch (Tight) adjust • Narrow	1) Adj item : [n SQLT] Adjust : [✳✳✳] SSG output : –113dBm (0.5µV) (MOD : 1kHz/±1.5kHz)						After input signal from SSG, press [B] key. That numeric will be stored in memory.	After adjusting SQL, check SQL open/close. SSG –113dBm : Open SSG OFF : Close [nC SQLT] MOD 1kHz/±1.5kHz [sC SQLT] MOD 1kHz/±2.4kHz [wC SQLT] MOD 1kHz/±3.0kHz
	2) Adj item : [nL SQLT] → [nC SQLT] → [nH SQLT] Adjust : [✳✳✳]							
• Wide 4k	3) Adj item : [s SQLT] Adjust : [✳✳✳] SSG output : –113dBm (0.5µV) (MOD : 1kHz/±2.4kHz)							
	4) Adj item : [sL SQLT] → [sC SQLT] → [sH SQLT] Adjust : [✳✳✳]							
• Wide 5k	5) Adj item : [w SQLT] Adjust : [✳✳✳] SSG output : –113dBm (0.5µV) (MOD : 1kHz/±3.0kHz)							
	6) Adj item : [wL SQLT] → [wC SQLT] → [wH SQLT] Adjust : [✳✳✳]							

ADJUSTMENT

Item	Condition	Measurement			Adjustment			Specifications/Remarks
		Test-equipment	Unit	Terminal	Unit	Parts	Method	
6. High RSSI adjust • Narrow	1) Adj item : [n HRSSI] Adjust : [✳✳✳] SSG output : –70dBm (MOD : 1kHz/±1.5kHz)	SSG AF VTVM Oscilloscope	Panel	ANT Universal connector	Panel	Selector knob	After input signal from SSG, press [B] key. That numeric will be stored in memory.	
	2) Adj item : [nL HRSSI] → [nC HRSSI] → [nH HRSSI] Adjust : [✳✳✳]							
• Wide 4k	3) Adj item : [s HRSSI] Adjust : [✳✳✳] SSG output : –70dBm (MOD : 1kHz/±2.4kHz)							
	4) Adj item : [sL HRSSI] → [sC HRSSI] → [sH HRSSI] Adjust : [✳✳✳]							
• Wide 5k	5) Adj item : [w HRSSI] Adjust : [✳✳✳] SSG output : –70dBm (MOD : 1kHz/±3.0kHz)							
	6) Adj item : [wL HRSSI] → [wC HRSSI] → [wH HRSSI] Adjust : [✳✳✳]							

Adjustment Points

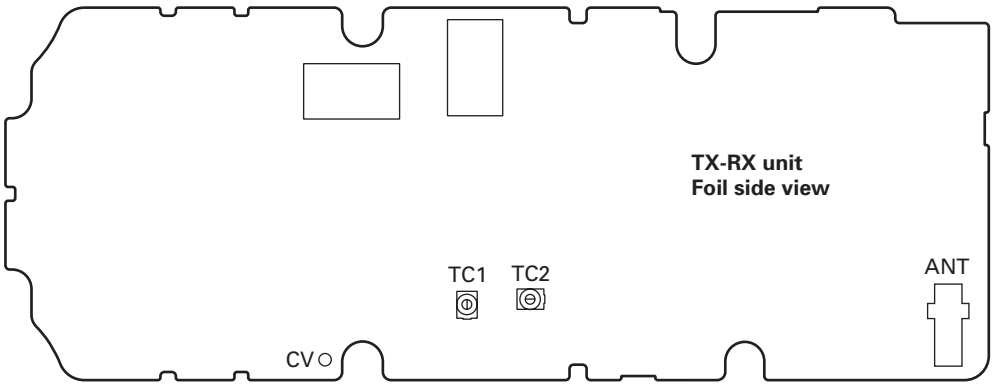

TERMINAL FUNCTION

Display unit (X54-3470-XX)

Pin No.	Name	I/O	Function
CN507			
1	SW2	O	Key matrix output (Side2 key)
2	K1	I	Key matrix input (Side key)
3	GND	-	GND
4	PTT	I	PTT input
5	SW1	O	Key matrix output (Side1 key)
CN508			
1	NC	-	Non connection
2	V5	O	LCD driving voltage output
3	Vss	-	GND
4	V5OUT	I	Step up voltage input
5	C2-	-	Step up capacitor connecting terminal
6	C2+	-	Step up capacitor connecting terminal
7	C1-	-	Step up capacitor connecting terminal
8	C1+	-	Step up capacitor connecting terminal
9	Vci	O	Voltage converter power supply output
10	VDD	O	LCD power supply output
11	OSC1	-	Non connection
12	OSC2	-	Non connection
13	RESET	O	LCD reset output
14	P/S	O	GND
15	RS	O	Register select output
16	R/W	O	GND
17	SCL	O	Serial clock output
18	SIO	O	Serial data output
19	CS	O	Chip select output
20	Vss	-	
CN509			
1	NC	-	Non connection
2	NC	-	Non connection
3	NC	-	Non connection
4	LCDRS	I	LCD RS input
5	AGND	-	GND
6	ME	-	Internal microphone ground
7	MIC	O	Internal microphone output
8	PTT	O	PTT output
9	SPSTB	I	Shift register storage enable input
10	CLK	I	Serial clock input
11	DATA	I	Serial data input
12	KI1	O	Key matrix 1 output
13	KI2	O	Key matrix 2 output
14	NC	-	Non connection
15	SB2	I	Power input after power switch
16	NC	-	Non connection
17	DGND	-	GND
18	LCDCS	I	LCD chip select input
19	LCDRST	I	LCD reset input
20	5M	I	5V

TX-RX unit (X57-6930-10)

Pin No.	Name	I/O	Function
CN400			
1	SB1	I	Power input after power switch
2	+B	O	Power output after passing through the fuse
3	EN3	I	Encoder pulse input
4	EN4	I	Encoder pulse input
5	DGND	-	GND
6	EN2	I	Encoder pulse input
7	EN1	I	Encoder pulse input
8	DGND	-	GND
9	VOL	I	Volume level input for audio control
10	5M	O	5V
CN500			
1	5M	O	5V
2	LCDRST	O	LCD reset output
3	LCDCS	O	LCD chip select output
4	DGND	-	GND
5	NC	-	Non connection
6	SB2	O	Power output after power switch
7	NC	-	Non connection
8	KI2	I	Key matrix 2 input
9	KI1	I	Key matrix 1 input
10	DATA	O	Serial data output
11	CLK	O	Serial clock output
12	SPSTB	O	Shift register storage enable output
13	PTT	I	PTT input
14	MIC	I	Internal microphone input
15	ME	-	Internal microphone ground
16	AGND	-	GND
17	LCDRS	O	LCD RS output
18	NC	-	Non connection
19	NC	-	Non connection
20	NC	-	Non connection

TERMINAL FUNCTION

Pin No.	Name	I/O	Function
			CN600
1	OPT1	I/O	Option boad I/F 1 Output : L ≤ 0.45V, H ≥ 4.7V/25kΩ load Input : L ≤ 1.0V, H ≥ 4.0V, Input voltage : 0V~5.0V
2	OPT3	I/O	Option boad I/F 3 Output : L ≤ 0.45V, H ≥ 4.7V/25kΩ load Input : L ≤ 1.0V, H ≥ 4.0V, Input voltage : 0V~5.0V
3	RXD1	I	Serial data input Input : L ≤ 1.0V, H ≥ 4.0V, Input voltage : 0V~5.0V
4	TXD1	O	Serial data output / PTT signal output (SC20-460) Output : L ≤ 0.45V, H ≥ 4.7V/25kΩ load
5	NC	-	
6	OPT4	O	Option boad I/F 4 Output : L ≤ 0.45V, H ≥ 4.7V/25kΩ load
7	USEL	O	UART speed select output L : 19200bps fixed
8	OPT5	O	Option boad I/F 5 Output : L ≤ 0.45V, H ≥ 4.7V/25kΩ load
9	DGND	-	GND
10	AGND	-	GND
11	AI	I	VGS audio input Zin ≥ 10kΩ, 1Vp-p max, Input voltage : 0V~5.0V
12	AO	O	VGS audio output Zo ≥ 10kΩ
13	AGND	-	GND
14	5A	O	5V power supply output 78mA max
15	STON	I	Side tone input 1kHz, 5Vp-p
16	DI/ANI	I	Data signal input Zin ≥ 22kΩ, 600±200mVp-p
17	TCONT	I	Speaker mute signal input Input : L ≤ 1.0V, H ≥ 4.0V, Input voltage : 0V~5.0V
18	MAN DOWN	O	Man down output Output : L ≤ 0.45V, H ≥ 4.7V/25kΩ load
19	INH	O	MIC mute signal input
20	OPT2	I/O	Option boad I/F 2 Output : L ≤ 0.45V, H ≥ 4.7V/25kΩ load Input : L ≤ 1.0V, H ≥ 4.0V, Input voltage : 0V~5.0V
21	TXO	O	MIC signal output (AC coupled) before pre-emphasis ZL ≥ 22kΩ, 130±50mVp-p
22	RXEO	O	Audio signal output (DC coupled) after de-emphasis ZL ≥ 30kΩ, 1±0.3Vp-p
23	RXEI	I	Audio signal input (DC coupled) after de-emphasis Zin ≥ 15kΩ, 1±0.3Vp-p
24	TXI	I	MIC signal input (AC coupled) before pre-emphasis Zin ≥ 22kΩ, 130±50mVp-p
25	OPT6	O	Option boad I/F 6 Output : L ≤ 0.45V, H ≥ 4.7V/25kΩ load
26	SB2	I	Power input after power switch 7.5V typ, 100mA max
			CN602
1	NC	-	Non connection
2	RXD	I	Serial data input
3	TXD	O	Serial data output
4	5CNS	O	5V output
5	E	-	GND
6	OPT	I/O	Option interface I/O
7	PF	I	Programmable function key input
8	PTT	I	External PTT input
9	ME	-	External microphone ground
10	EMC	I	External microphone input
11	MSW	I	EXT/INT MIC switch input
12	SP-	O	BTL output + for external speaker
13	SP+	O	BTL output - for external speaker
14	SSW	I	EXT/INT SP switch input

Universal connector

Pin No.	Name	I/O	Function
1	SSW	I	Ext/Int speaker switch input L : External speaker ON, H : Internal speaker ON, Input voltage : 0V~5.0V
2	SP+	O	BTL output + for external speaker Audio output power at volume max (1kHz, Batt =7.5V) 1.3±0.5W typ (at RL=8Ω) 0.9±0.5W typ (at RL=16Ω)
3	SP-	O	BTL output - for external speaker Audio output power at volume max (1kHz, Batt =7.5V) 1.3±0.5W typ (at RL=8Ω) 0.9±0.5W typ (at RL=16Ω)
4	MSW	I	Ext/Int MIC switch Input L : External Mic ON, H : Internal Mic ON Input voltage : 0V~5.0V

TERMINAL FUNCTION

Pin No.	Name	I/O	Function
5	EMC	I	External MIC input Impedance : 1.8kΩ typ (at 1kHz) Audio level : 7.5±2.5mVrms for 60% of system deviation Nominal DC voltage : 5.0±1V DC
6	ME	-	External MIC GND
7	PTT	I	External PTT input L : PTT ON
8	PF	I	Programmable function key input Input voltage : 0V~5.0V Input level : 4.4V~5.0V (None), 3.1V~4.4V (PF2 key ON), 2.3V~3.1V (PF1 key ON), 0V~2.3V (PF1,PF2 key ON) (Pull up to 5V 10kΩ)
9	OPT	-	Non connection
10	E	-	GND
11	5U	O	5V power supply output Max output current : 140mA
12	TXD	O	Serial data output L ≤ 0.45V, H ≥ 4.7V/25kΩ load Baud rate : 115200bps max
13	RXD	I	Serial data input Input : L ≤ 1.0V, H ≥ 4.0V, Input voltage : 0V~5.0V Baud rate : 57600bps max
14	NC (E)	-	Not use (GND)

Solder pad

Name	I/O	Function
OPT5	O	Option boad I/F 5 Output : L ≤ 0.45V, H ≥ 4.7V/25kΩ load
OPT6	O	Option boad I/F 6 Output : L ≤ 0.45V, H ≥ 4.7V/25kΩ load
OPT3	I/O	Option boad I/F 3 Output : L ≤ 0.45V, H ≥ 4.7V/25kΩ load Input : L ≤ 1.0V, H ≥ 4.0V, Input voltage : 0V~5.0V
OPT1	O	Option boad I/F 1 Output : L ≤ 0.45V, H ≥ 4.7V/25kΩ load

Name	I/O	Function
RXD	I	Serial data input Input : L ≤ 1.0V, H ≥ 4.0V, Input voltage : 0V~5.0V
TXD	O	Serial data output Output : L ≤ 0.45V, H ≥ 4.7V/25kΩ load
RXI	I	Audio signal input (DC coupled) before de-emphasis
STON	I	Side tone input 1kHz, 5Vp-p
TCONT	I	Speaker mute signal input Input : L ≤ 1.0V, H ≥ 4.0V, Input voltage : 0V~5.0V
TXO	O	MIC signal output (AC coupled) before pre-emphasis ZL ≥ 22kΩ, 130±50mVp-p
RXEO	O	Audio signal output (DC coupled) after de-emphasis ZL ≥ 30kΩ, 1±0.3Vp-p
OPT2	I/O	Option boad I/F 2 Output : L ≤ 0.45V, H ≥ 4.7V/25kΩ load Input : L ≤ 1.0V, H ≥ 4.0V, Input voltage : 0V~5.0V
OPT4	O	Option boad I/F 4 Output : L ≤ 0.45V, H ≥ 4.7V/25kΩ load
GND	-	GND
SB2	I	Power input after power switch 7.5V typ, 100mA max
RXEI	I	Audio signal input (DC coupled) after de-emphasis Zin ≥ 15kΩ, 1±0.3Vp-p
TXI	I	MIC signal input (AC coupled) before pre-emphasis Zin ≥ 22kΩ, 130±50mVp-p
RXO	O	Audio signal output (DC coupled) before de-emphasis
5A	O	5V power supply output 78mA max
DI/ANI	I	Data signal input Zin ≥ 22kΩ, 600±200mVp-p
INH	O	MIC mute signal input
RSSI	O	RSSI output Zo=56kΩ
MDSW	I	Man down switch input Input : L ≤ 1.0V, H ≥ 4.0V, Input voltage : 0V~5.0V
GND	-	GND for man down switch
RXD1	I	Serial data input Input : L ≤ 1.0V, H ≥ 4.0V, Input voltage : 0V~5.0V
TXD1	O	Serial data output / PTT signal output (SC20-460) Output : L ≤ 0.45V, H ≥ 4.7V/25kΩ load

TK-2180 PC BOARD

DISPLAY UNIT (X54-3470-XX) -10 : K -11 : K2
Component side view (J72-0921-09)

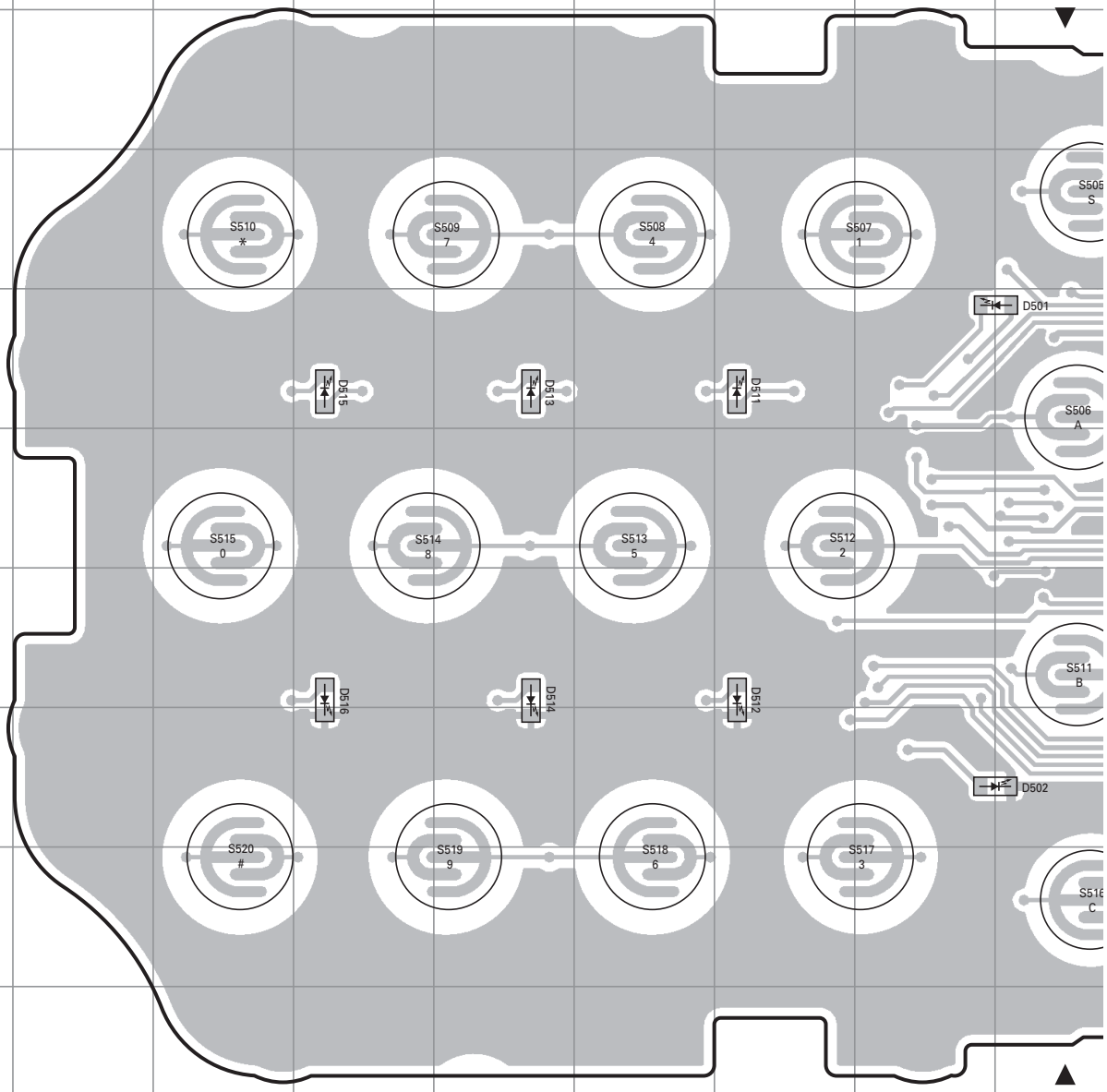

Ref. No.	Address	Ref. No.	Address
D501	5J	D515	5E
D502	8J	D516	7E
D511	5H	D517	3M
D512	7H	D518	3N
D513	5F	D519	10N
D514	7F	D520	10M

DISPLAY UNIT (X54-3470-XX) -10 : K -11 : K2
Component side view (J72-0921-09)

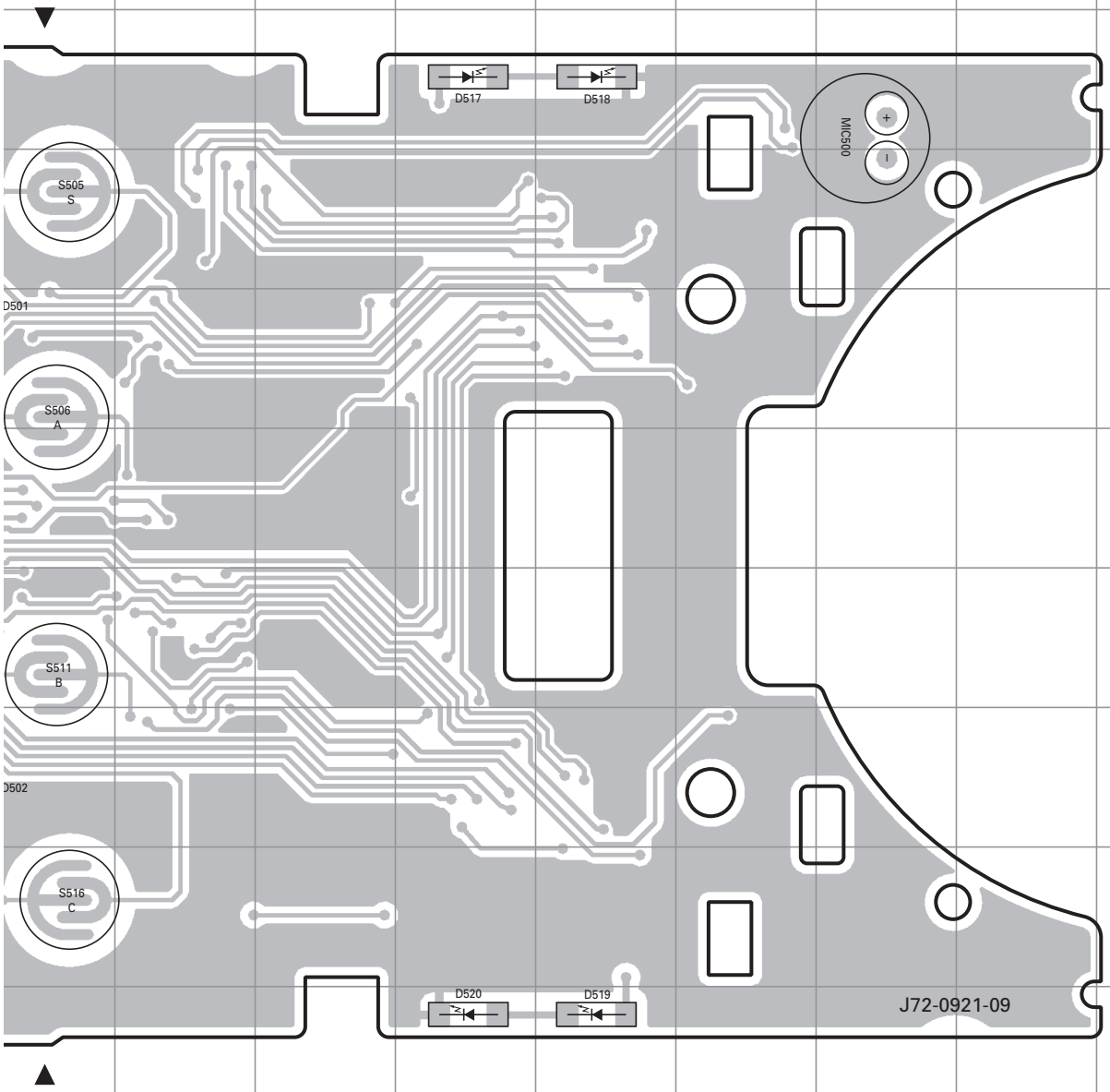

Component side
Layer 1
Layer 2
Foil side

TK-2180 PC BOARD

PC BOARD TK-2180

DISPLAY UNIT (X54-3470-XX) -10 : K -11 : K2
Component side view (J72-0921-09)

DISPLAY UNIT (X54-3470-XX) -10 : K -11 : K2
Component side view (J72-0921-09)

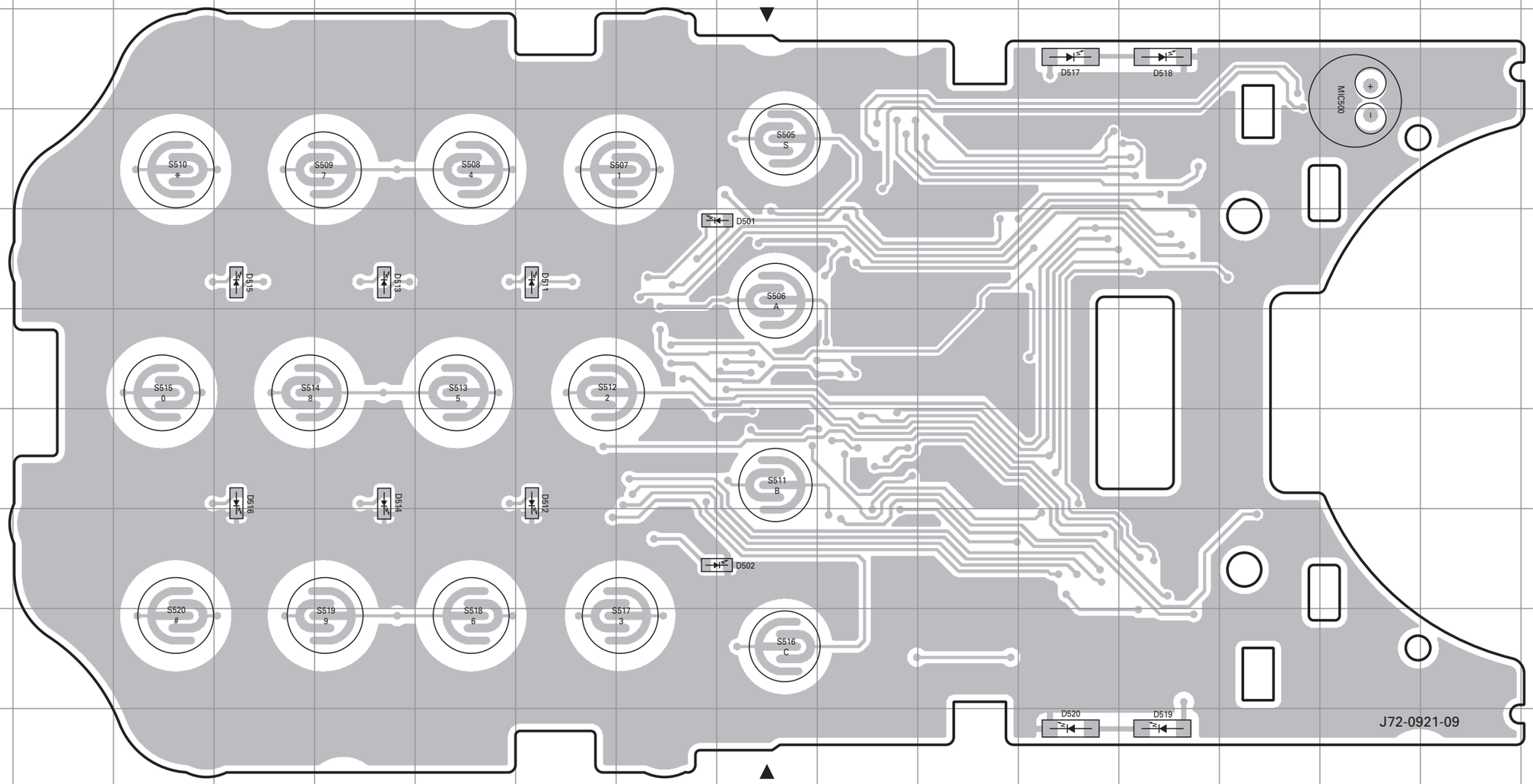

Ref. No.	Address	Ref. No.	Address
D501	5J	D515	5E
D502	8J	D516	7E
D511	5H	D517	3M
D512	7H	D518	3N
D513	5F	D519	10N
D514	7F	D520	10M

Component side
Layer 1
Layer 2
Foil side

TK-2180 PC BOARD

DISPLAY UNIT (X54-3470-XX) -10 : K -11 : K2
Foil side view (J72-0921-09)

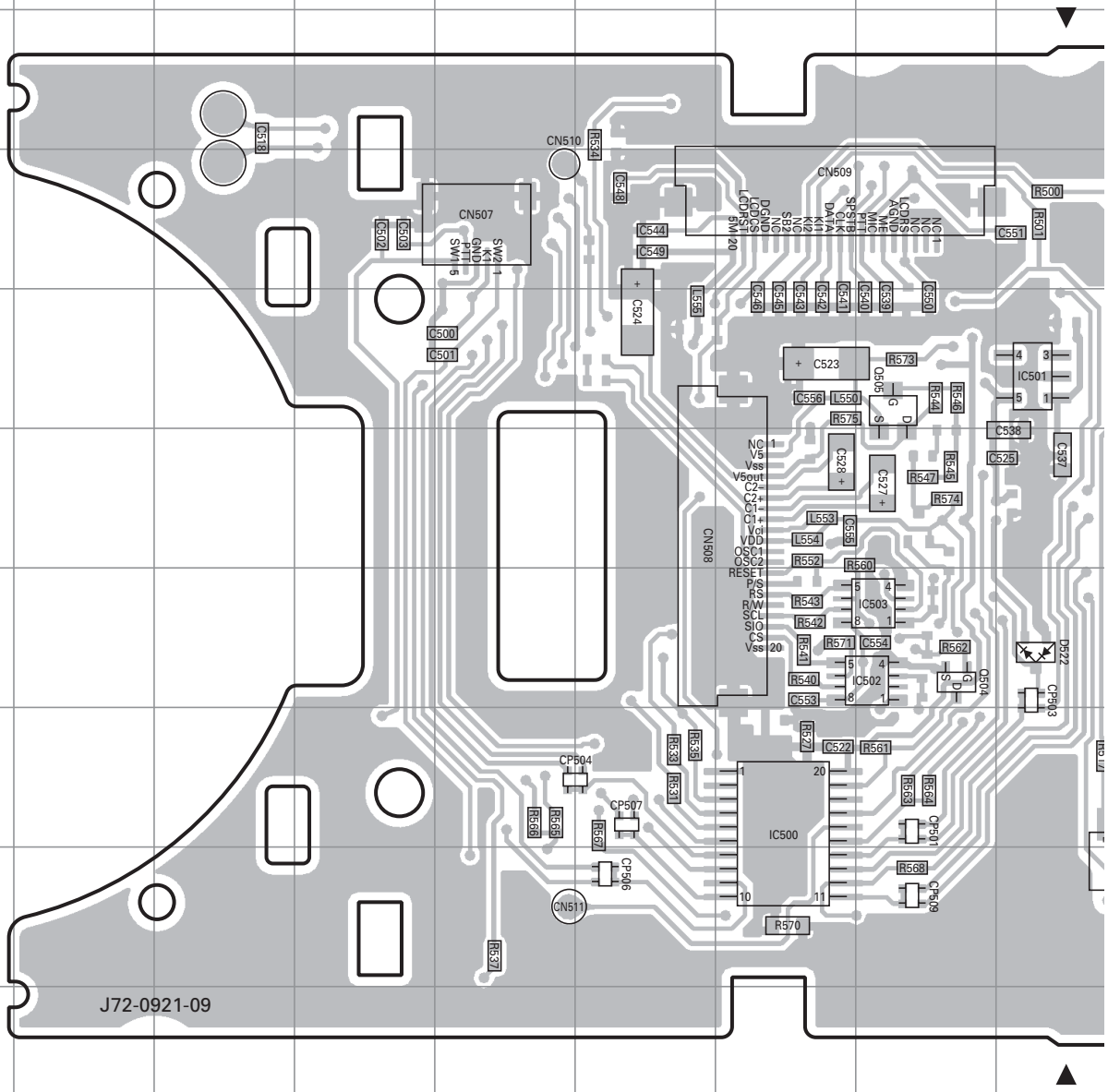

Ref. No.	Address	Ref. No.	Address
IC500	8H	Q502	9K
IC501	5J	Q504	7I
IC502	7I	Q505	5I
IC503	7I	D500	8K
Q501	8K	D522	7J

DISPLAY UNIT (X54-3470-XX) -10 : K -11 : K2
Foil side view (J72-0921-09)

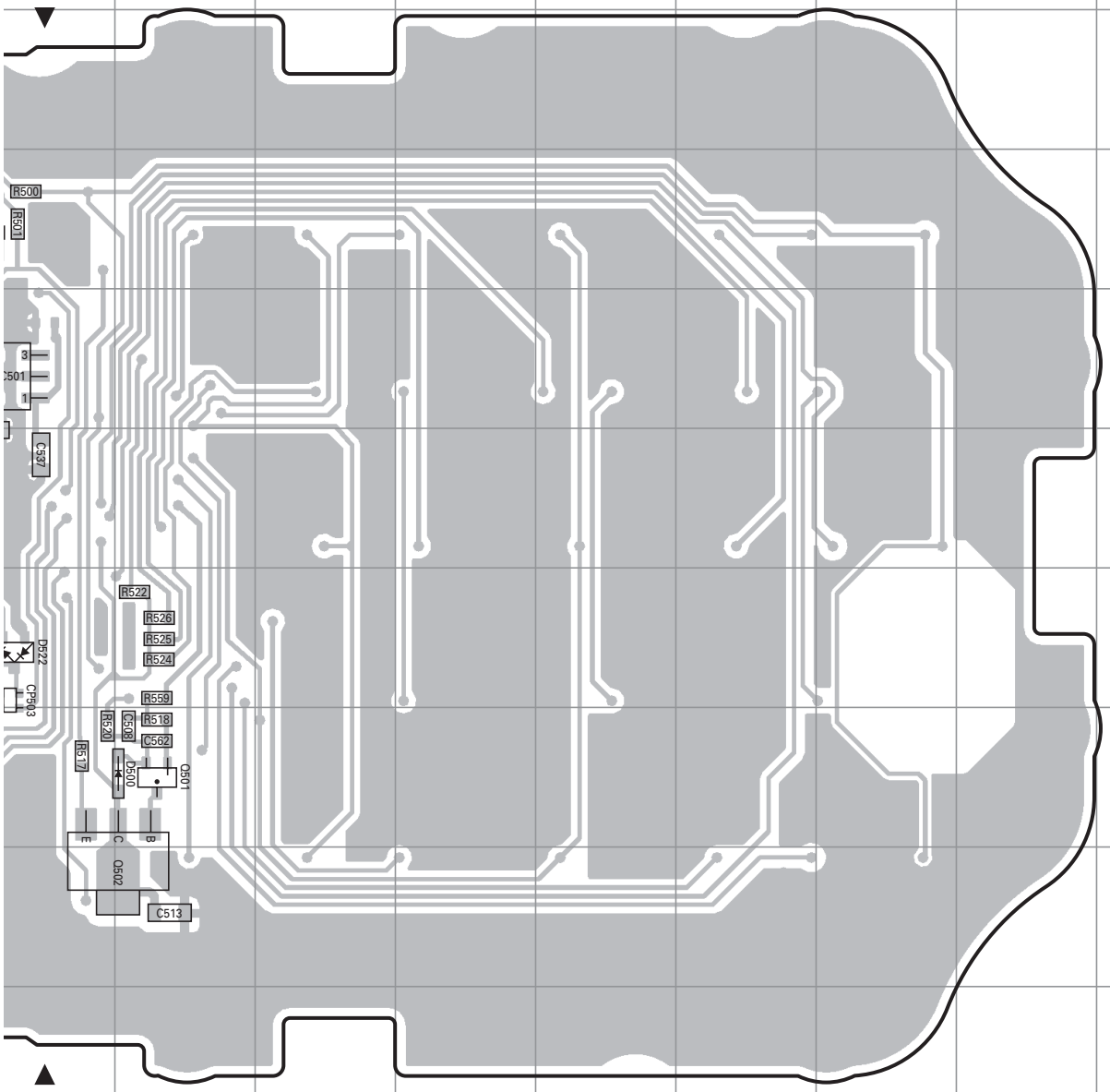

Component side
Layer 1
Layer 2
Foil side

TK-2180 PC BOARD

PC BOARD TK-2180

DISPLAY UNIT (X54-3470-XX) -10 : K -11 : K2
Foil side view (J72-0921-09)

DISPLAY UNIT (X54-3470-XX) -10 : K -11 : K2
Foil side view (J72-0921-09)

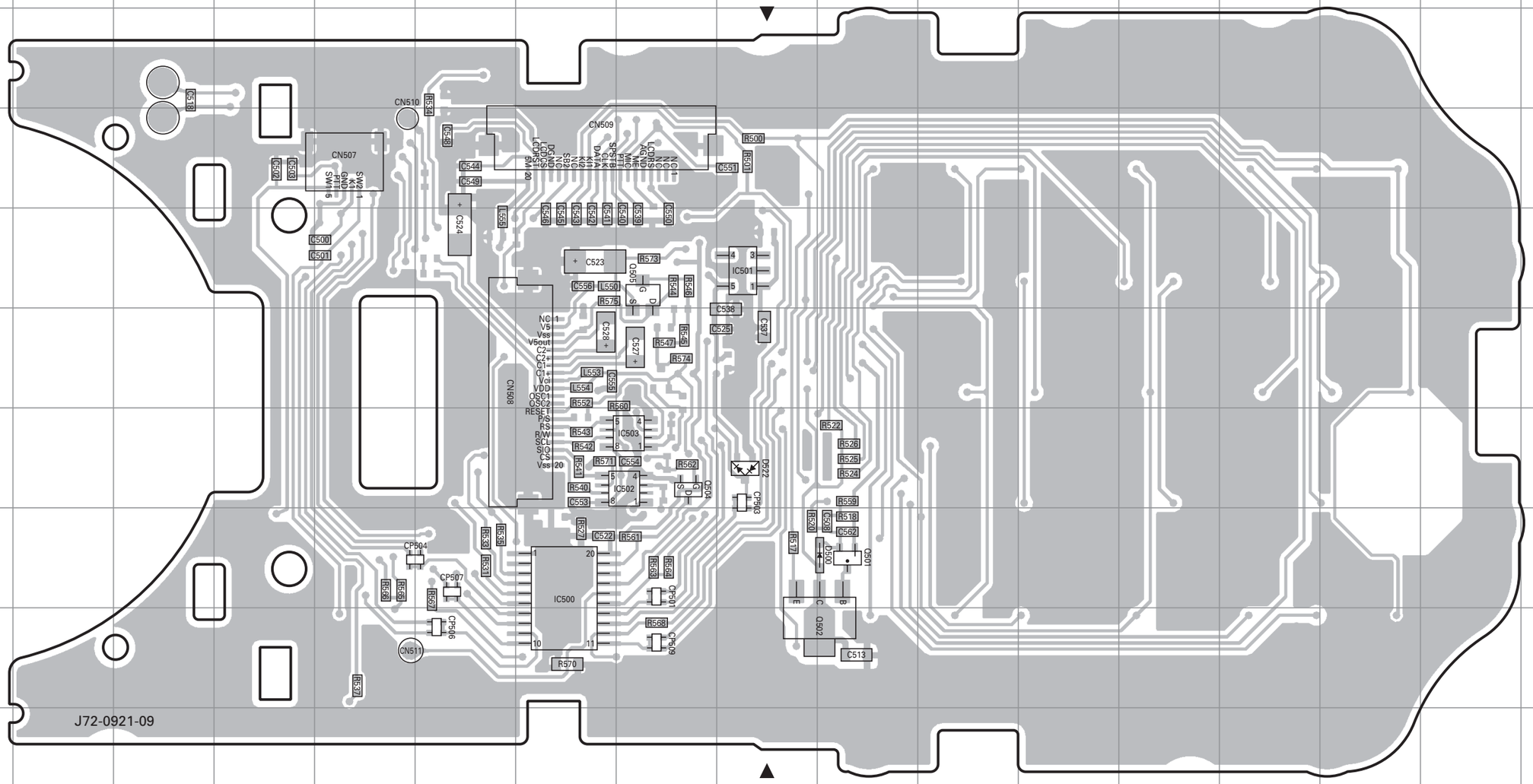

Ref. No.	Address	Ref. No.	Address
IC500	8H	Q502	9K
IC501	5J	Q504	7I
IC502	7I	Q505	5I
IC503	7I	D500	8K
Q501	8K	D522	7J

Component side
Layer 1
Layer 2
Foil side

TK-2180 PC BOARD

TX-RX UNIT (X57-6930-10) Component side view (J72-0919-09)

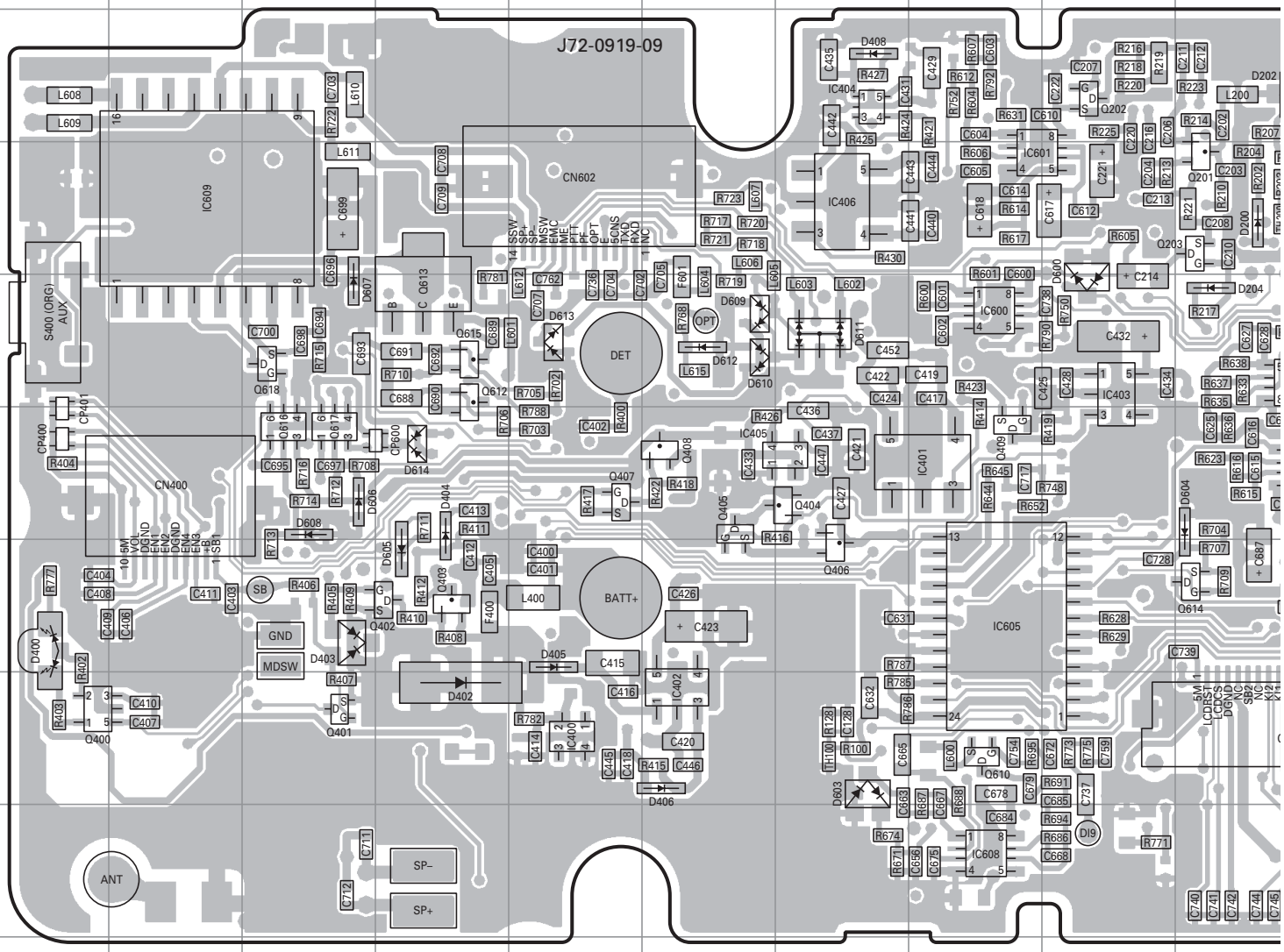

Ref. No.	Address	Ref. No.	Address	Ref. No.	Address	Ref. No.	Address	Ref. No.	Address	Ref. No.	Address
IC400	8E	IC602	7K	Q403	7D	Q610	8H	D204	5J	D603	8G
IC401	6H	IC603	6J	Q404	6G	Q611	3K	D400	7A	D604	6J
IC402	8F	IC604	5J	Q405	6F	Q612	5D	D402	8D	D605	7D
IC403	5I	IC605	7H	Q406	7G	Q613	5D	D403	7C	D606	6C
IC404	3G	IC606	6L	Q407	6E	Q614	7J	D404	6D	D607	5C
IC405	6G	IC607	5L	Q408	6F	Q615	5D	D405	7E	D608	6C
IC406	4G	IC608	9H	Q409	6H	Q616	6C	D406	8F	D609	5F
IC500	9P	IC609	4B	Q502	5N	Q617	6C	D408	3G	D610	5F
IC502	6P	Q201	4J	Q602	6L	Q618	5C	D500	4R	D611	5G
IC503	4Q	Q202	3I	Q605	4K	Q619	7L	D501	3R	D612	5F
IC504	3Q	Q203	4J	Q606	8M	Q620	4K	D502	4R	D613	5E
IC505	8N	Q400	8A	Q607	8M	Q621	4P	D600	5I	D614	6D
IC600	5H	Q401	8C	Q608	5K	D200	4J	D601	8L		
IC601	4H	Q402	7D	Q609	3K	D202	3J	D602	8L		

TX-RX UNIT (X57-6930-10) Component side view (J72-0919-09)

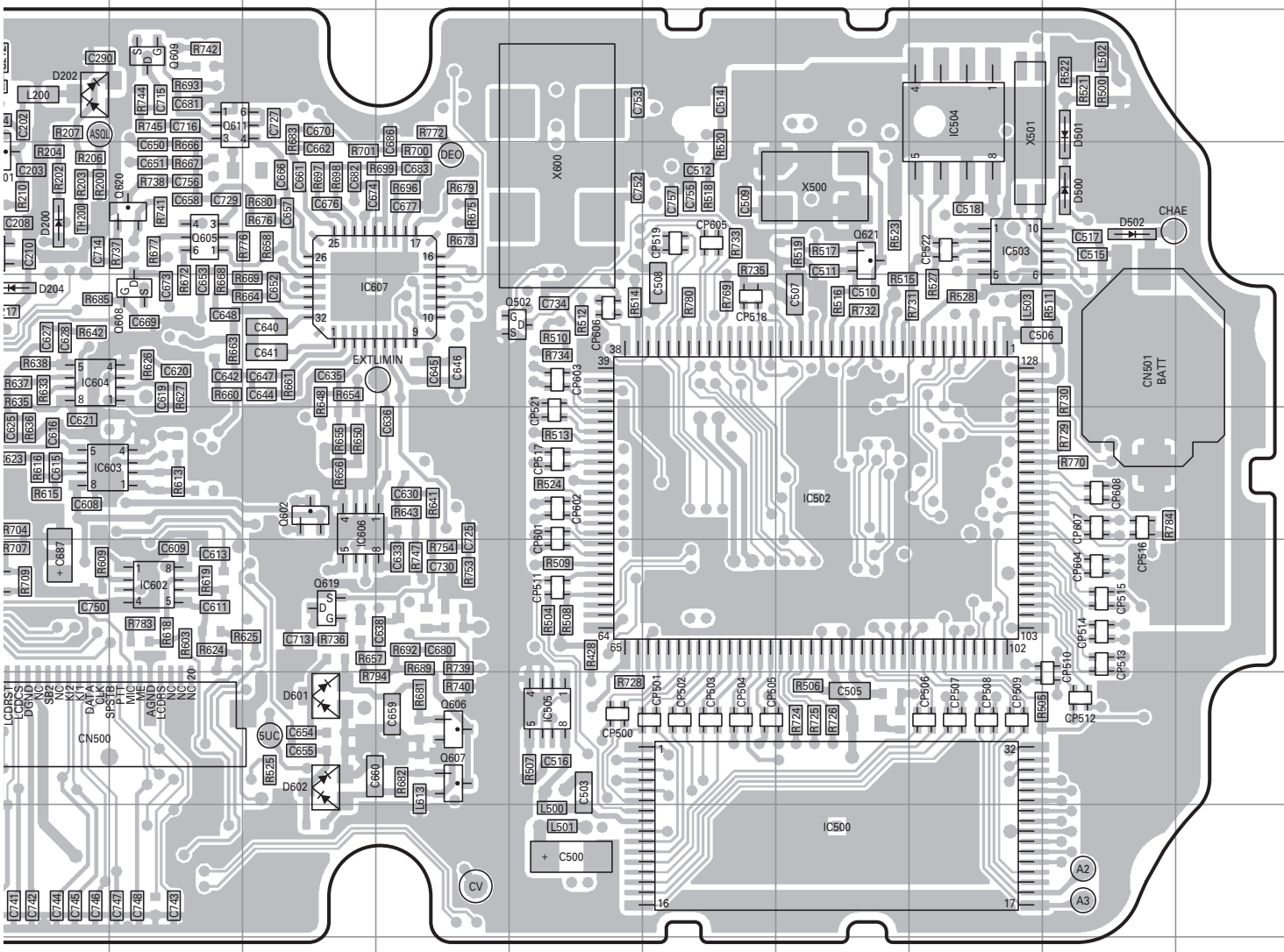

Component side

Layer 1

Layer 2

Layer 3

Layer 4

Layer 5

Layer 6

Foil side

TK-2180 PC BOARD

PC BOARD TK-2180

TX-RX UNIT (X57-6930-10) Component side view (J72-0919-09)

TX-RX UNIT (X57-6930-10) Component side view (J72-0919-09)

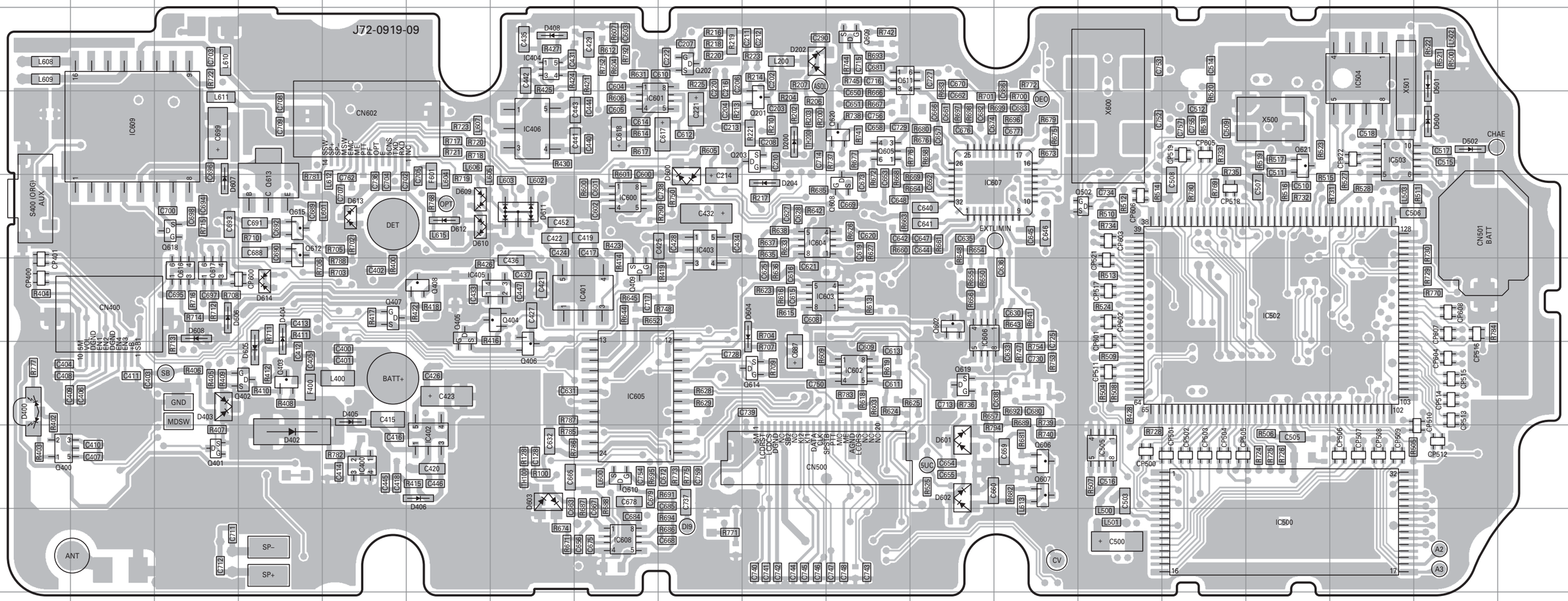

Ref. No.	Address	Ref. No.	Address	Ref. No.	Address	Ref. No.	Address	Ref. No.	Address	Ref. No.	Address
IC400	8E	IC602	7K	Q403	7D	Q610	8H	D204	5J	D603	8G
IC401	6H	IC603	6J	Q404	6G	Q611	3K	D400	7A	D604	6J
IC402	8F	IC604	5J	Q405	6F	Q612	5D	D402	8D	D605	7D
IC403	5I	IC605	7H	Q406	7G	Q613	5D	D403	7C	D606	6C
IC404	3G	IC606	6L	Q407	6E	Q614	7J	D404	6D	D607	5C
IC405	6G	IC607	5L	Q408	6F	Q615	5D	D405	7E	D608	6C
IC406	4G	IC608	9H	Q409	6H	Q616	6C	D406	8F	D609	5F
IC500	9P	IC609	4B	Q502	5N	Q617	6C	D408	3G	D610	5F
IC502	6P	Q201	4J	Q602	6L	Q618	5C	D500	4R	D611	5G
IC503	4Q	Q202	3I	Q605	4K	Q619	7L	D501	3R	D612	5F
IC504	3Q	Q203	4J	Q606	8M	Q620	4K	D502	4R	D613	5E
IC505	8N	Q400	8A	Q607	8M	Q621	4P	D600	5I	D614	6D
IC600	5H	Q401	8C	Q608	5K	D200	4J	D601	8L		
IC601	4H	Q402	7D	Q609	3K	D202	3J	D602	8L		

Component side
Layer 1
Layer 2
Layer 3
Layer 4
Layer 5
Layer 6
Foil side

TK-2180 PC BOARD

TX-RX UNIT (X57-6930-10) Foil side view (J72-0919-09)

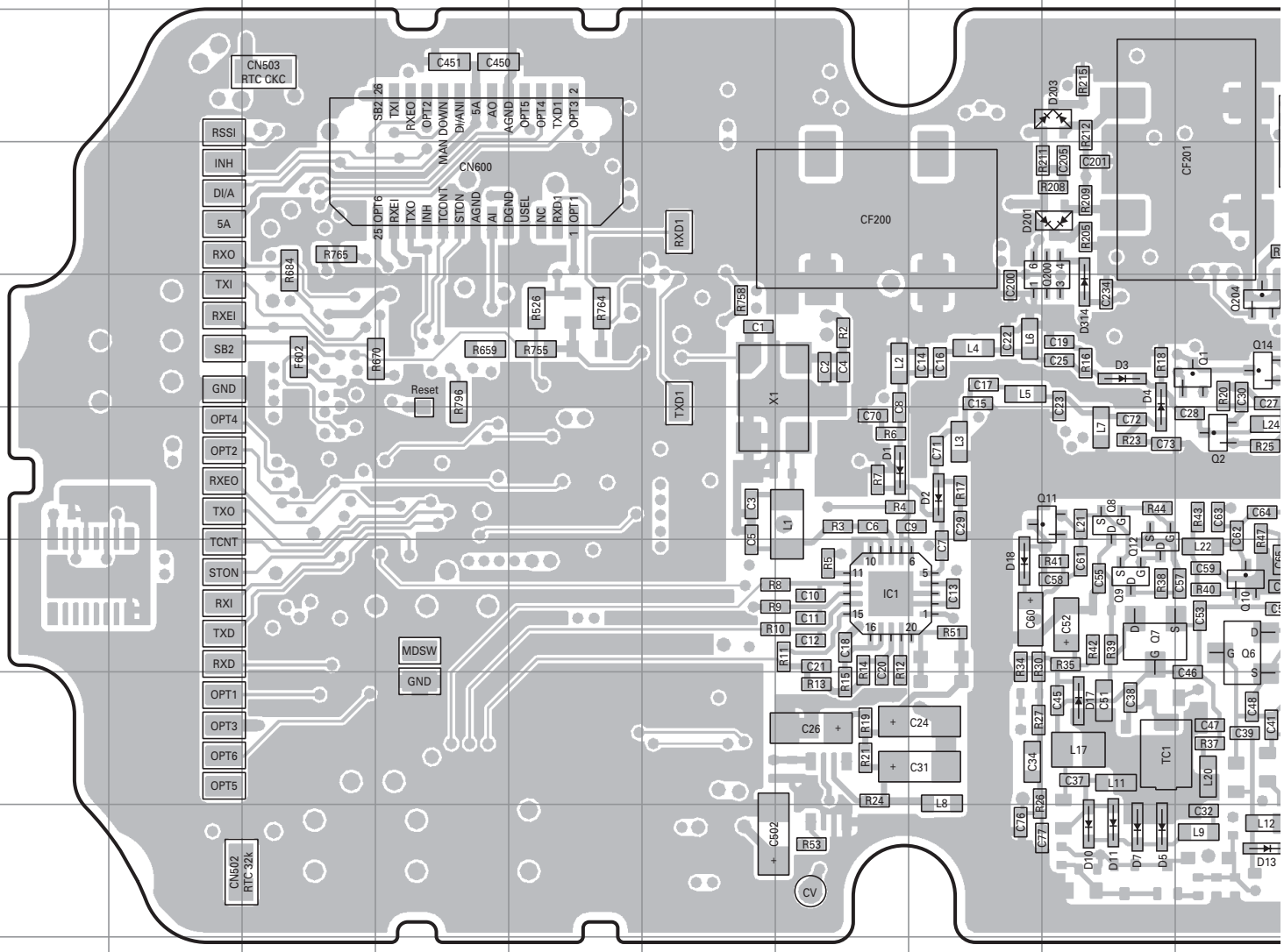

Ref. No.	Address	Ref. No.	Address	Ref. No.	Address	Ref. No.	Address	Ref. No.	Address	Ref. No.	Address
IC1	7G	Q11	6I	Q108	5O	D2	6H	D18	7H	D208	3O
IC100	6P	Q12	7I	Q200	5I	D3	5I	D100	6L	D209	5Q
IC200	4K	Q13	6J	Q204	5J	D4	5I	D103	5P	D210	6Q
Q1	5J	Q14	5J	Q205	4L	D5	9I	D106	8P	D211	7Q
Q2	6J	Q101	7K	Q206	5N	D7	9I	D107	8P	D213	7Q
Q6	7J	Q102	7L	Q207	4P	D9	9J	D108	4O	D314	5I
Q7	7I	Q104	5P	Q622	3Q	D10	9I	D201	4I		
Q8	6I	Q105	8M	Q623	3M	D11	9I	D203	3I		
Q9	7I	Q106	5O	Q624	3Q	D13	9J	D205	6L		
Q10	7J	Q107	6P	D1	6G	D17	8I	D207	3O		

PC BOARD TK-2180

TX-RX UNIT (X57-6930-10) Foil side view (J72-0919-09)

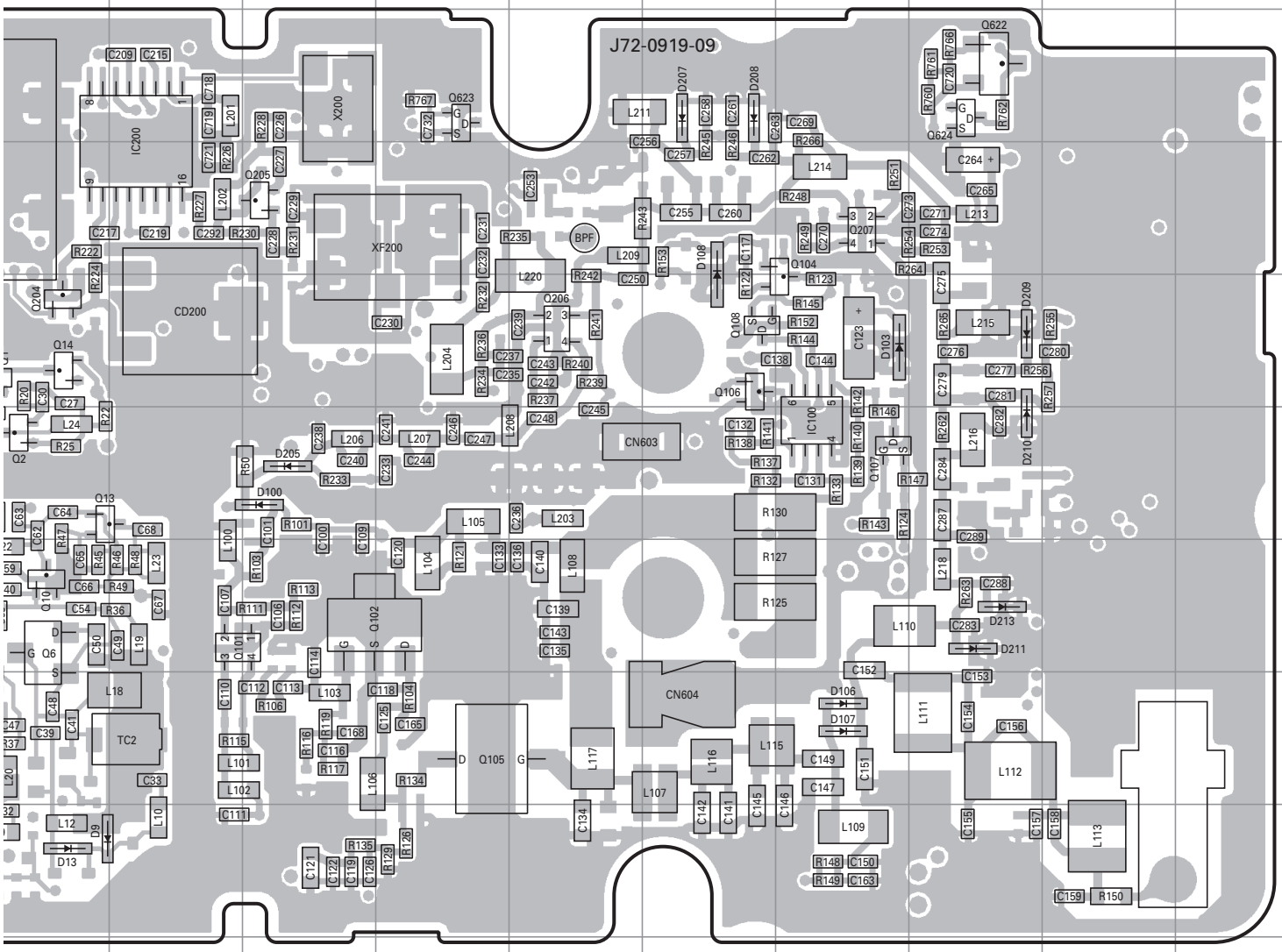

Component side

Layer 1
Layer 2
Layer 3
Layer 4
Layer 5
Layer 6

Foil side

TK-2180 PC BOARD

PC BOARD TK-2180

TX-RX UNIT (X57-6930-10) Foil side view (J72-0919-09)

TX-RX UNIT (X57-6930-10) Foil side view (J72-0919-09)

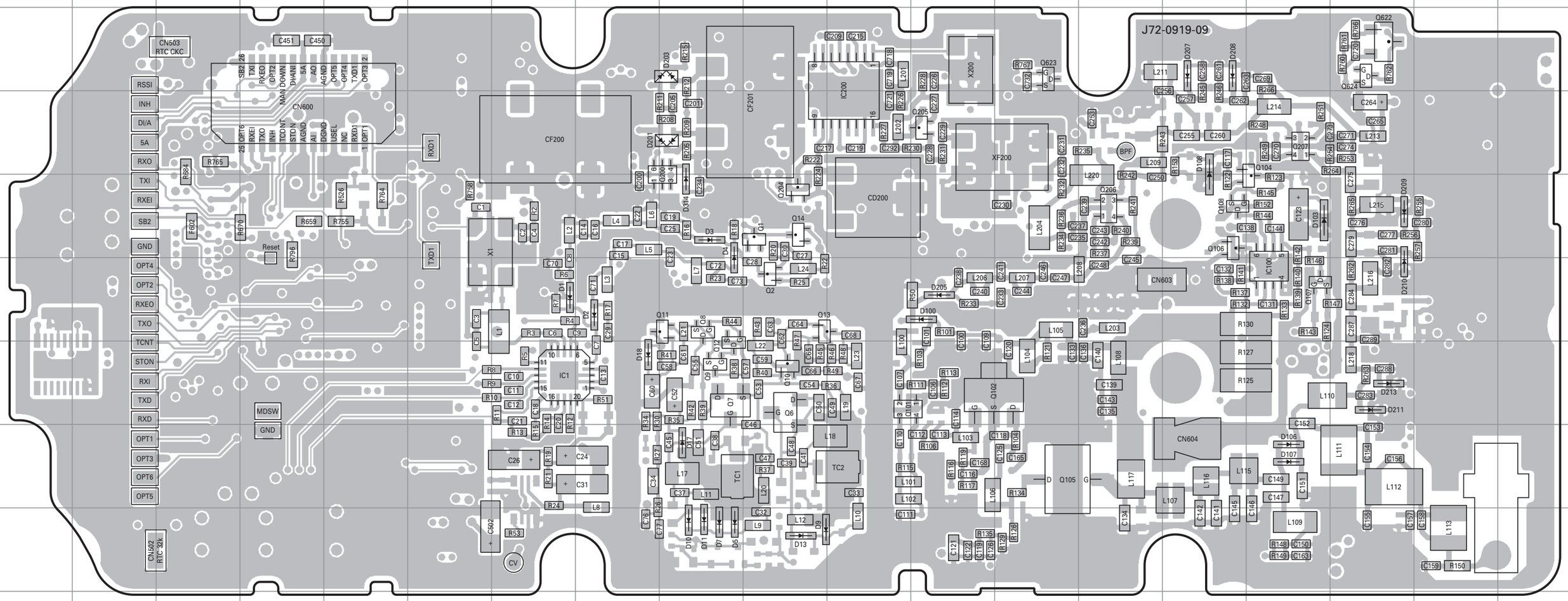

Ref. No.	Address	Ref. No.	Address	Ref. No.	Address	Ref. No.	Address	Ref. No.	Address	Ref. No.	Address
IC1	7G	Q11	6I	Q108	5O	D2	6H	D18	7H	D208	3O
IC100	6P	Q12	7I	Q200	5I	D3	5I	D100	6L	D209	5Q
IC200	4K	Q13	6J	Q204	5J	D4	5I	D103	5P	D210	6Q
Q1	5J	Q14	5J	Q205	4L	D5	9I	D106	8P	D211	7Q
Q2	6J	Q101	7K	Q206	5N	D7	9I	D107	8P	D213	7Q
Q6	7J	Q102	7L	Q207	4P	D9	9J	D108	4O	D314	5I
Q7	7I	Q104	5P	Q622	3Q	D10	9I	D201	4I		
Q8	6I	Q105	8M	Q623	3M	D11	9I	D203	3I		
Q9	7I	Q106	5O	Q624	3Q	D13	9J	D205	6L		
Q10	7J	Q107	6P	D1	6G	D17	8I	D207	3O		

Component side
Layer 1
Layer 2
Layer 3
Layer 4
Layer 5
Layer 6
Foil side

TK-2180 SCHEMATIC DIAGRAM

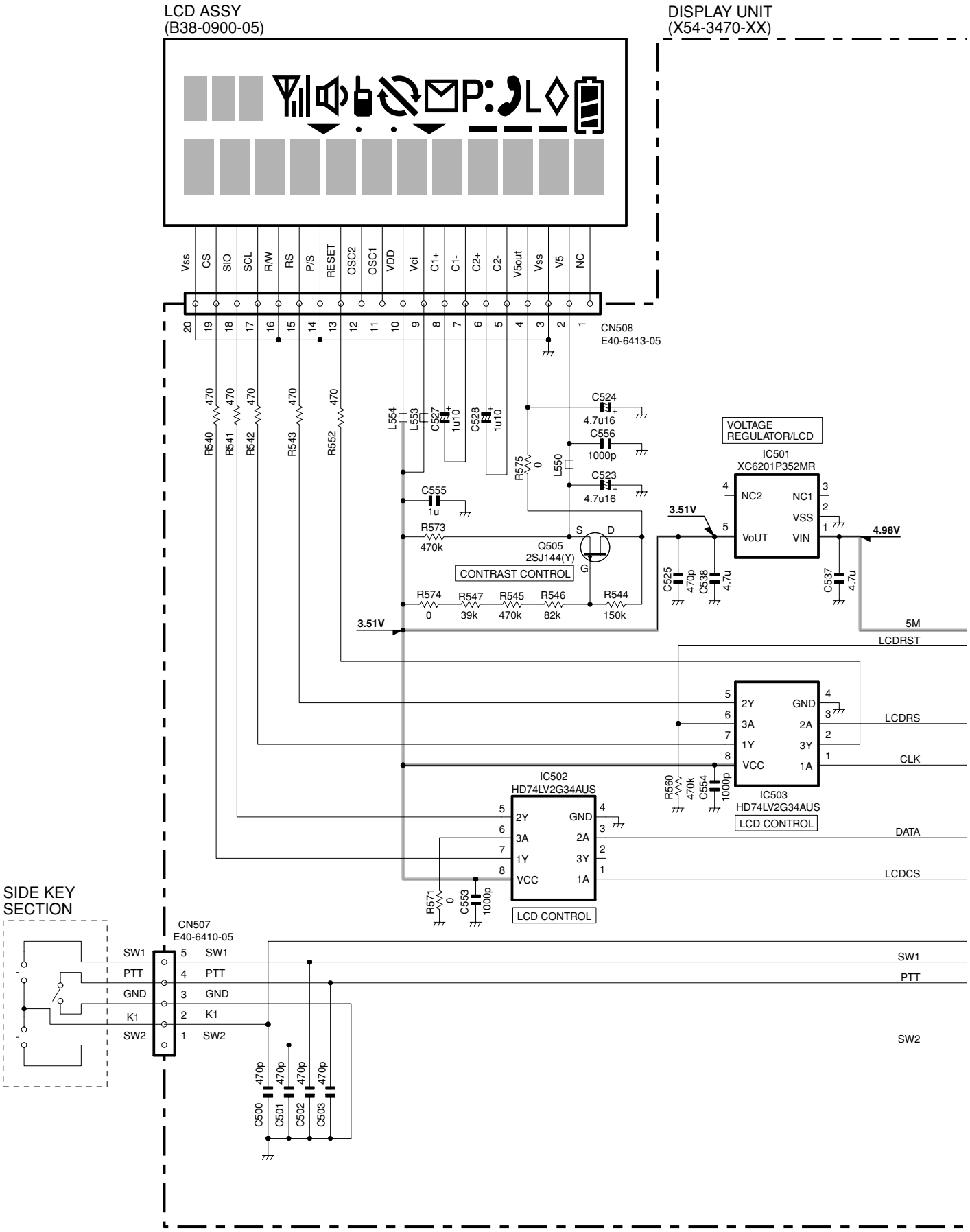

X54-3470-XX		D511	D512	D513	D514	D515	D516	R524	R525	R526
-10	K	NO	NO	NO	NO	NO	NO	NO	NO	NO
-11	K2	B30-2215-05	B30-2215-05	B30-2215-05	B30-2215-05	B30-2215-05	B30-2215-05	390	390	390

SCHEMATIC DIAGRAM TK-2180

DISPLAY UNIT (X54-3470-XX)

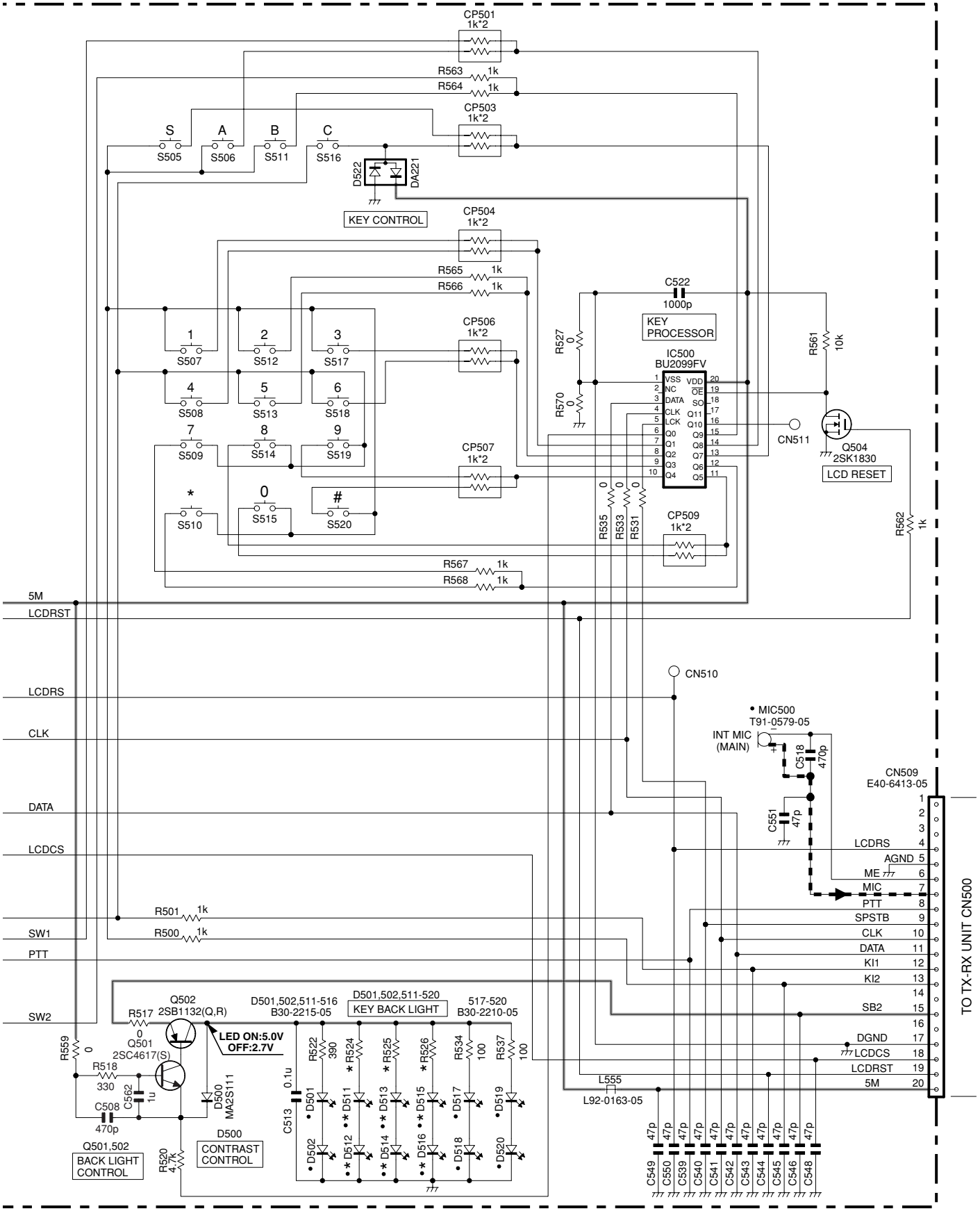

Note : The components marked with a dot (•) are parts of layer 1.

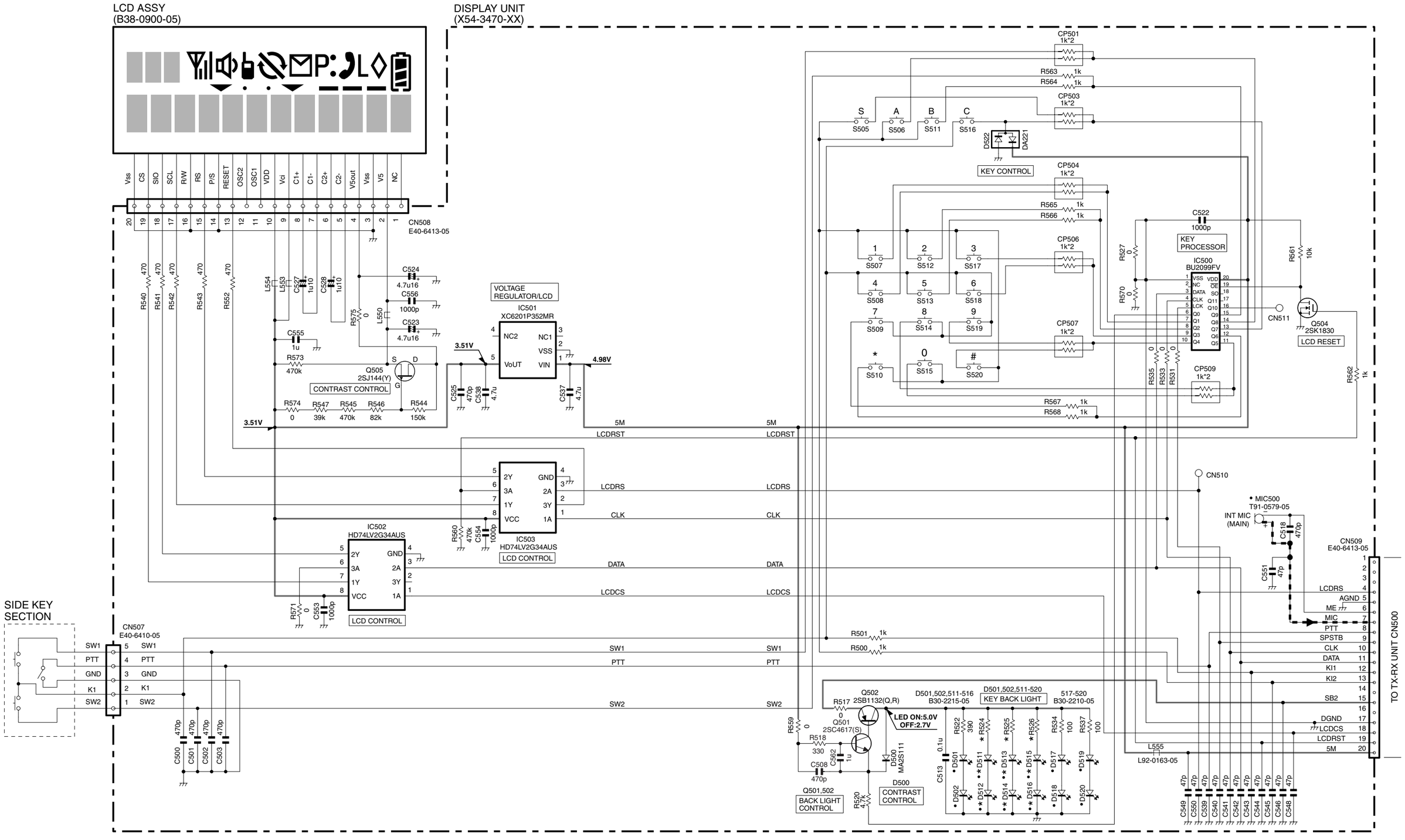

X54-3470-XX		D511	D512	D513	D514	D515	D516	R524	R525	R526
-10	K	NO	NO	NO	NO	NO	NO	NO	NO	NO
-11	K2	B30-2215-05	B30-2215-05	B30-2215-05	B30-2215-05	B30-2215-05	B30-2215-05	390	390	390

TK-2180 SCHEMATIC DIAGRAM

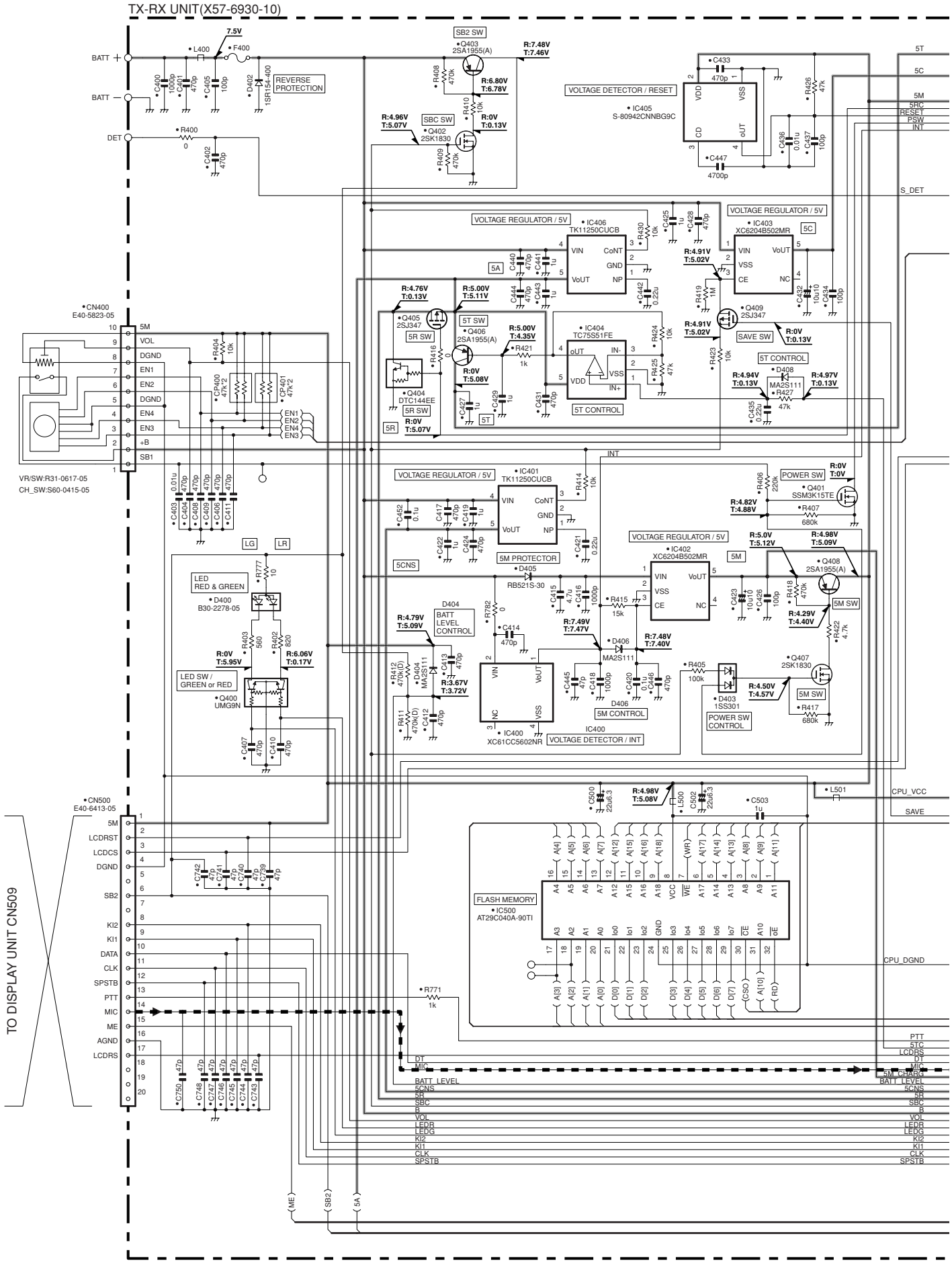

SCHEMATIC DIAGRAM TK-2180

TX-RX UNIT (X57-6930-10)

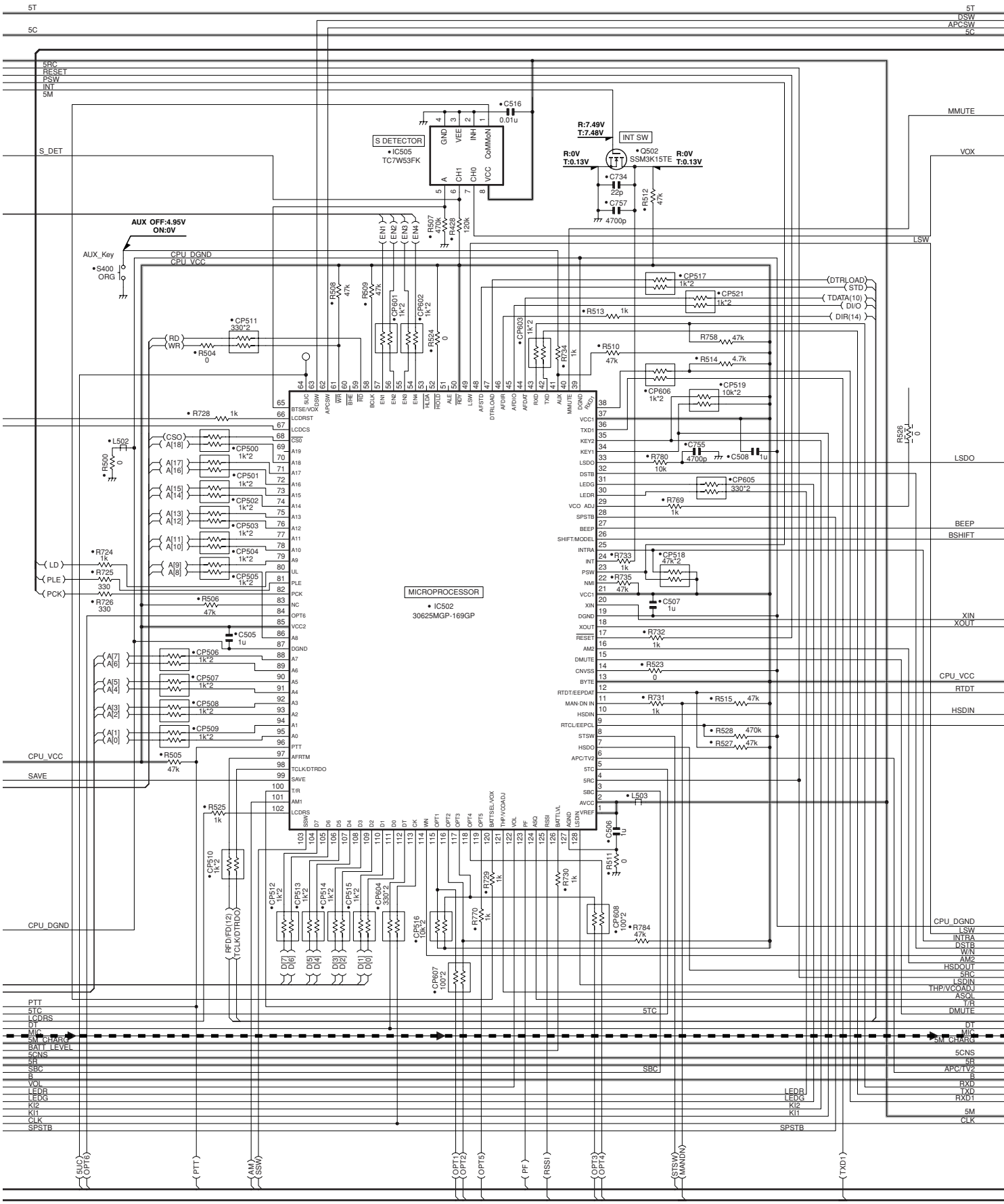

TK-2180 SCHEMATIC DIAGRAM

TX-RX UNIT (X57-6930-10)

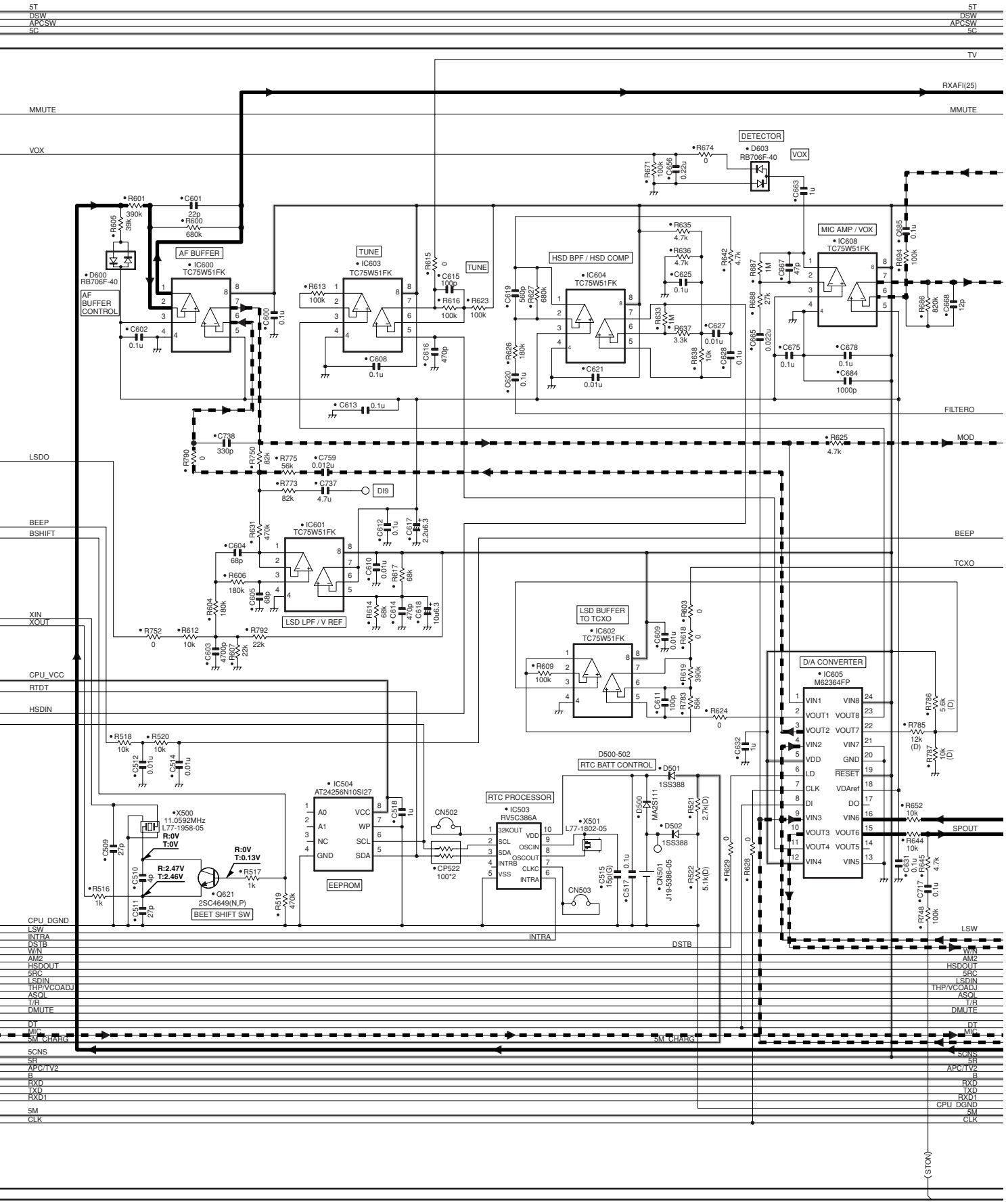

SCHEMATIC DIAGRAM TK-2180

TX-RX UNIT (X57-6930-10)

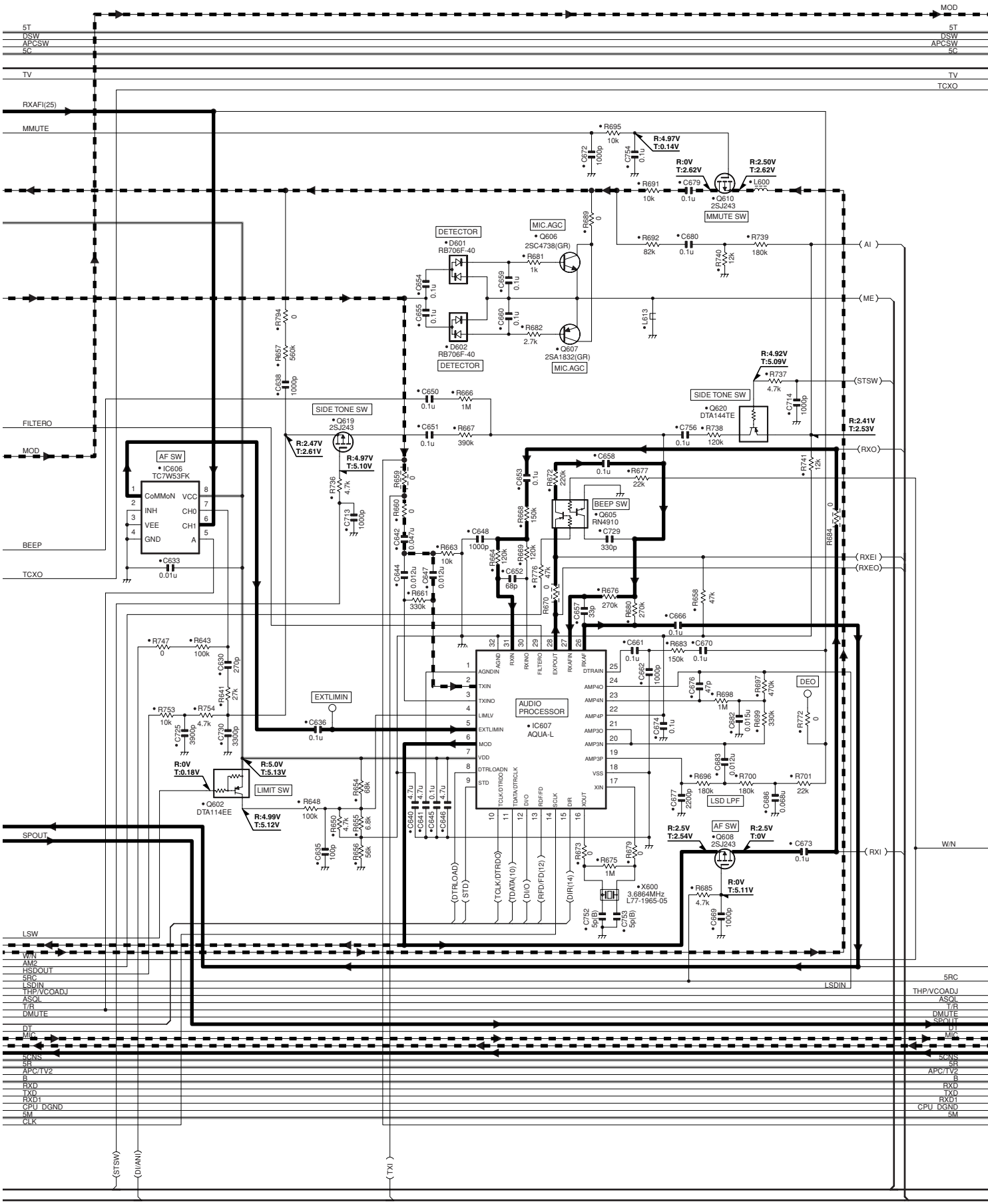

TK-2180 SCHEMATIC DIAGRAM

TX-RX UNIT (X57-6930-10)

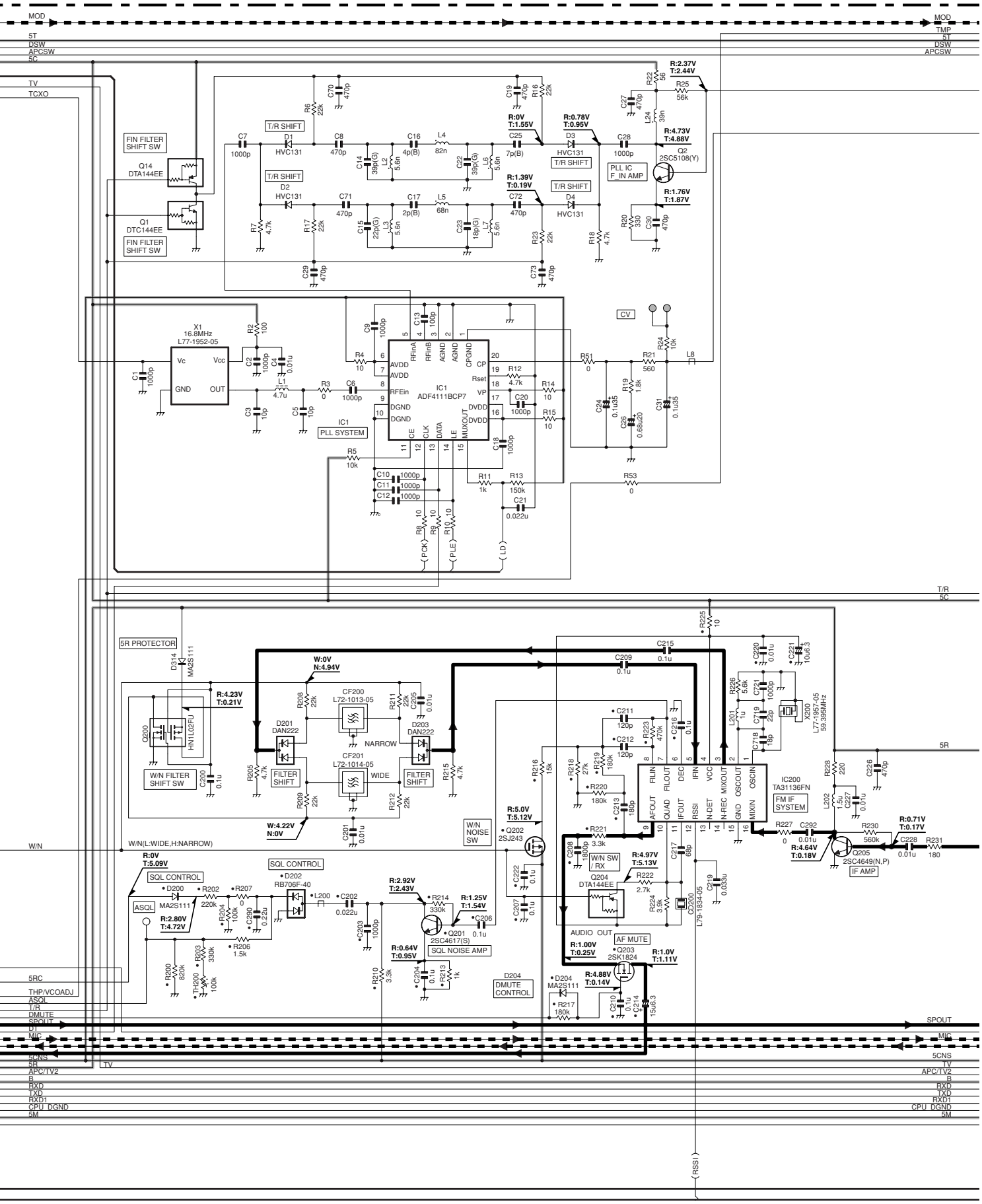

SCHEMATIC DIAGRAM TK-2180

TX-RX UNIT (X57-6930-10)

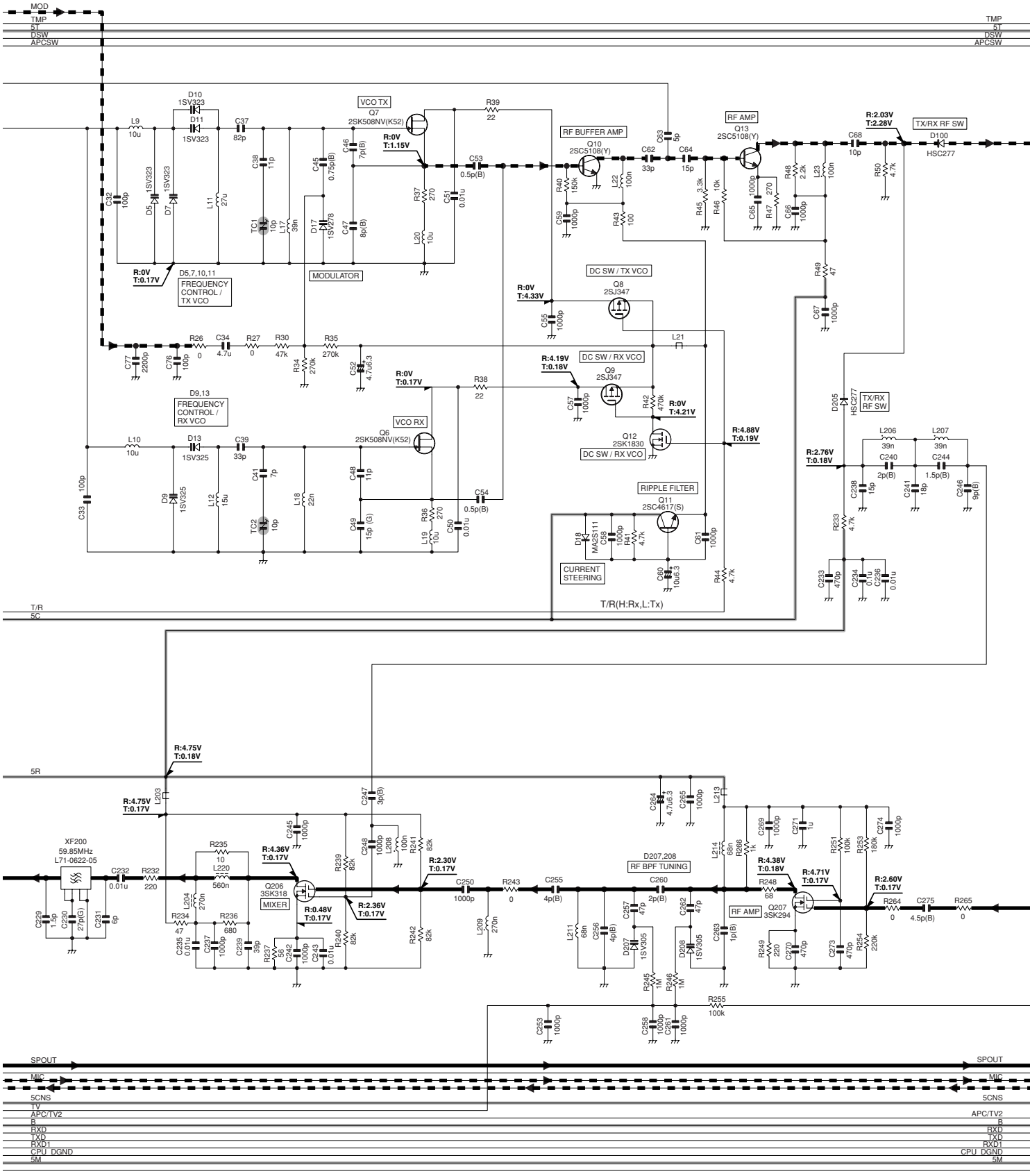

TK-2180 SCHEMATIC DIAGRAM

TX-RX UNIT (X57-6930-10)

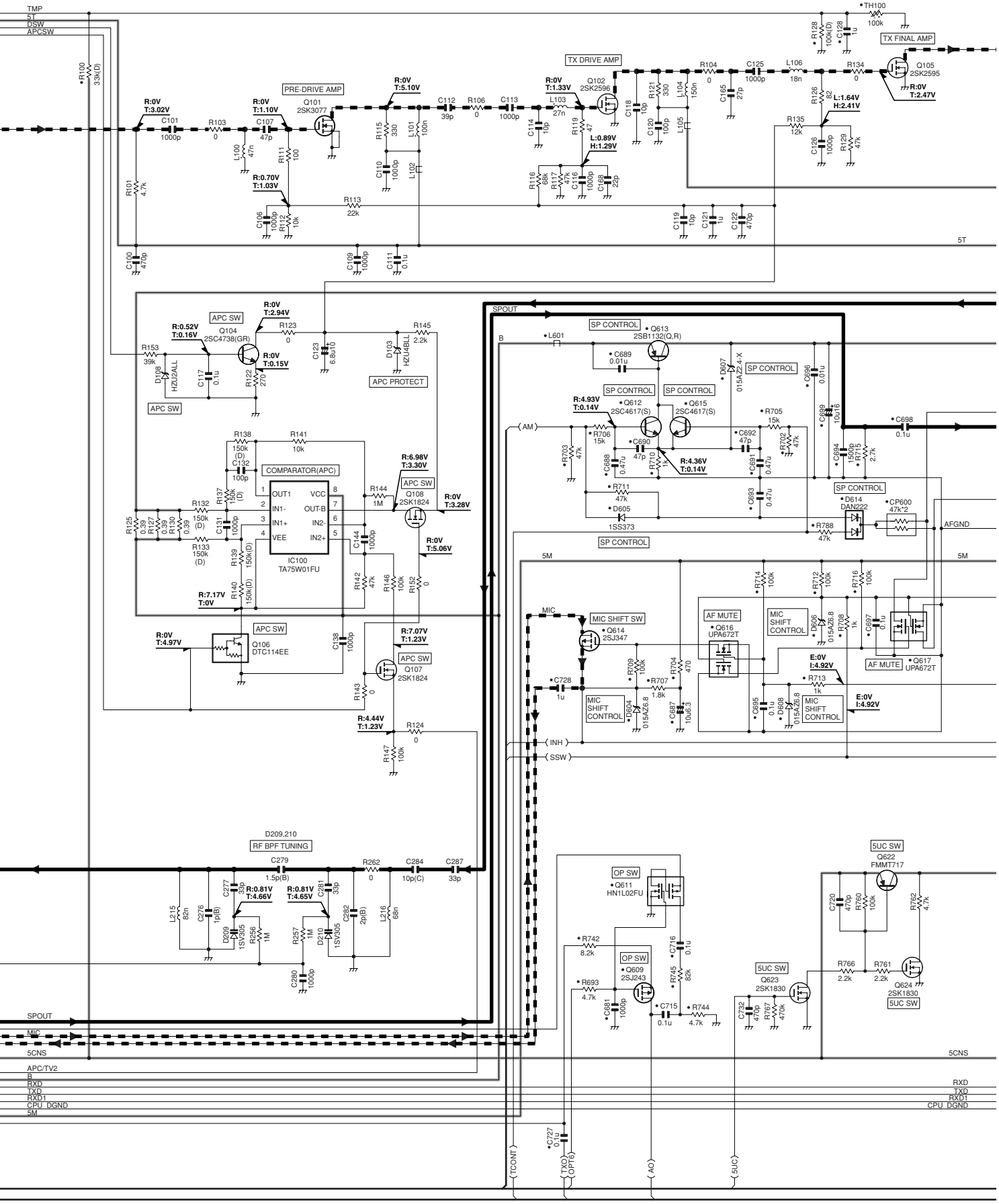

SCHEMATIC DIAGRAM TK-2180

TX-RX UNIT (X57-6930-10)

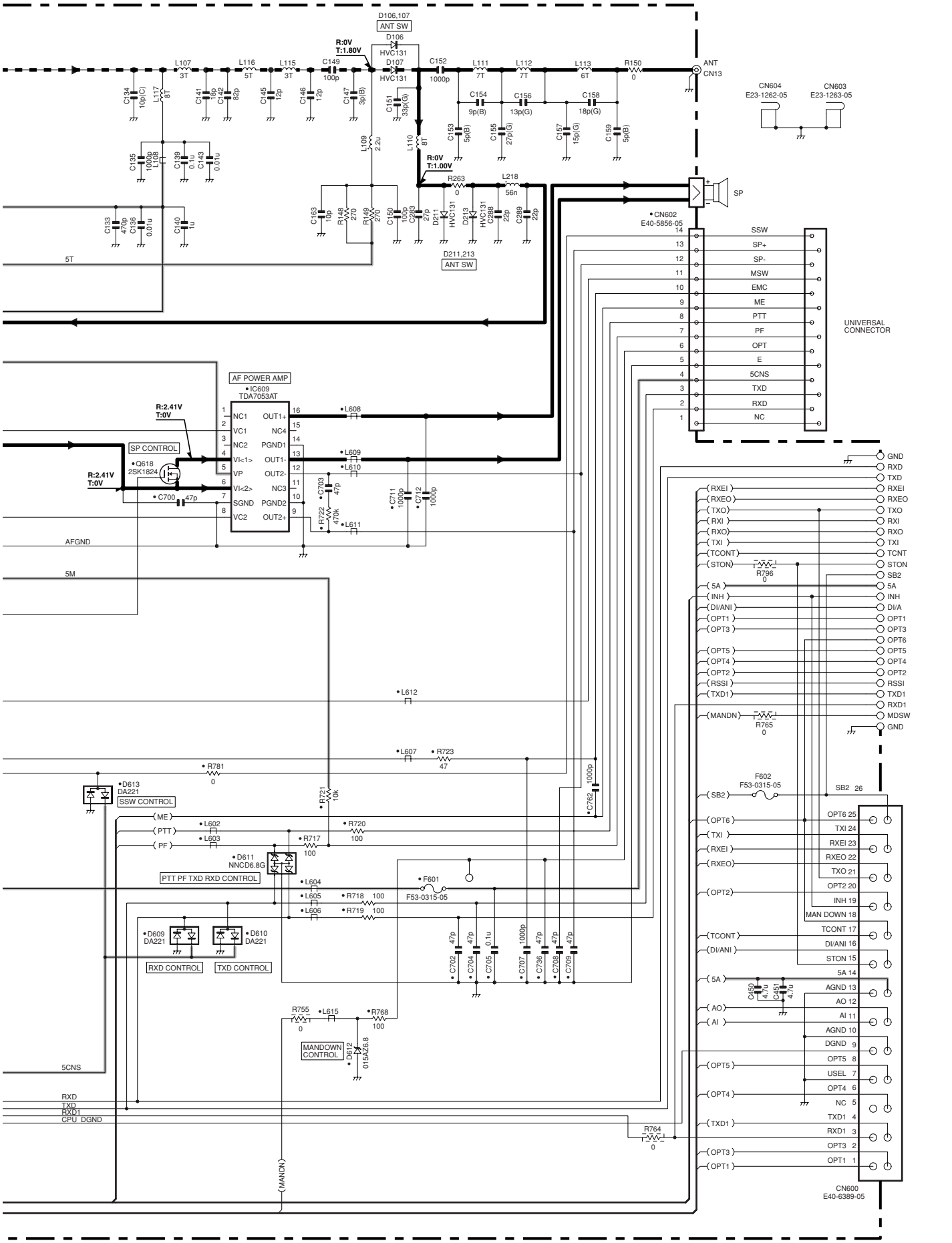

Note : The components marked with a dot (•) are parts of layer 1.

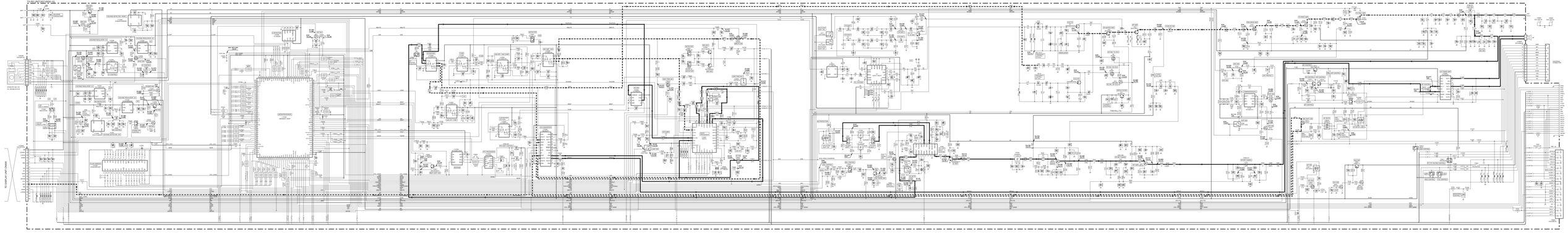

BLOCK DIAGRAM

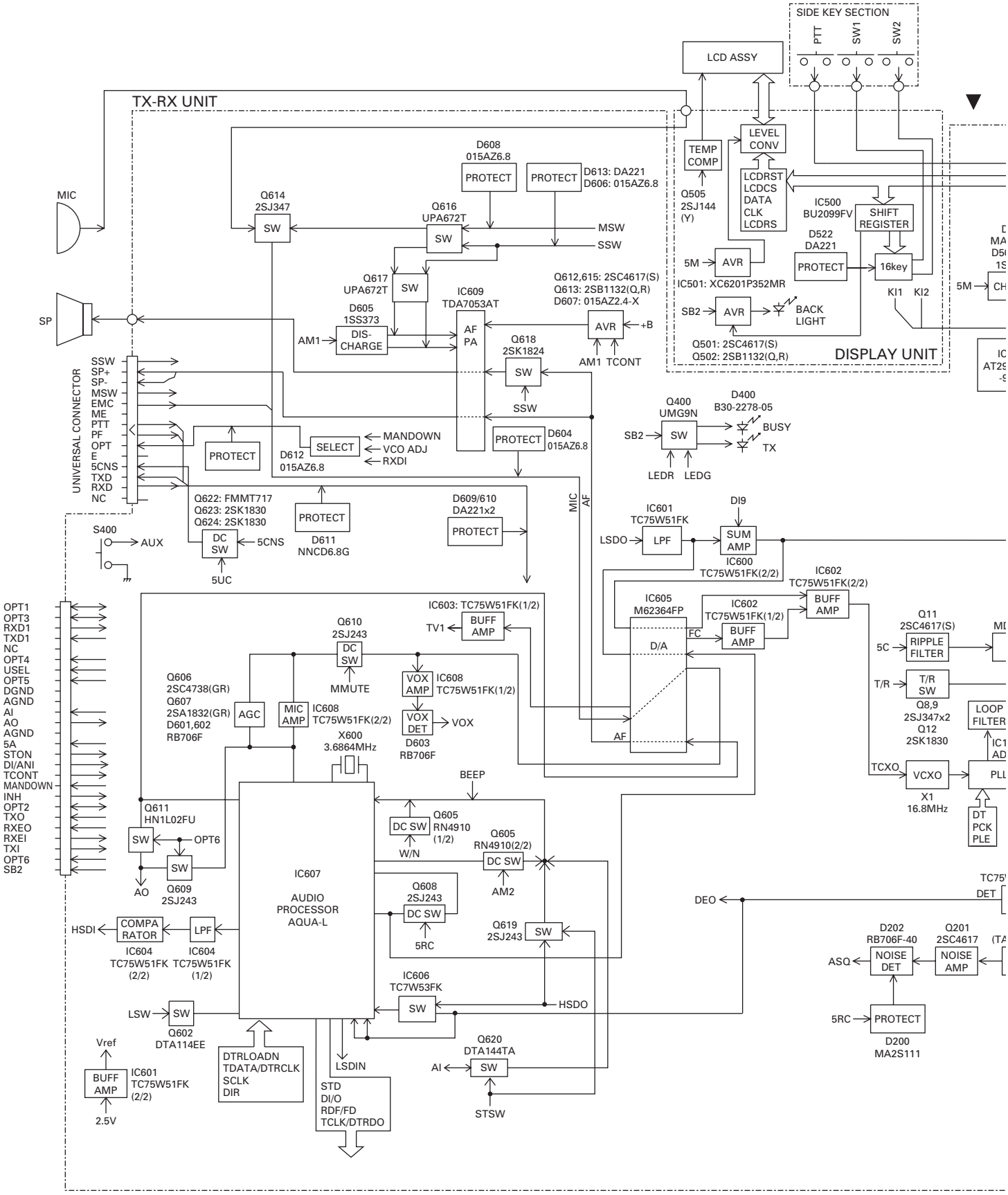

BLOCK DIAGRAM

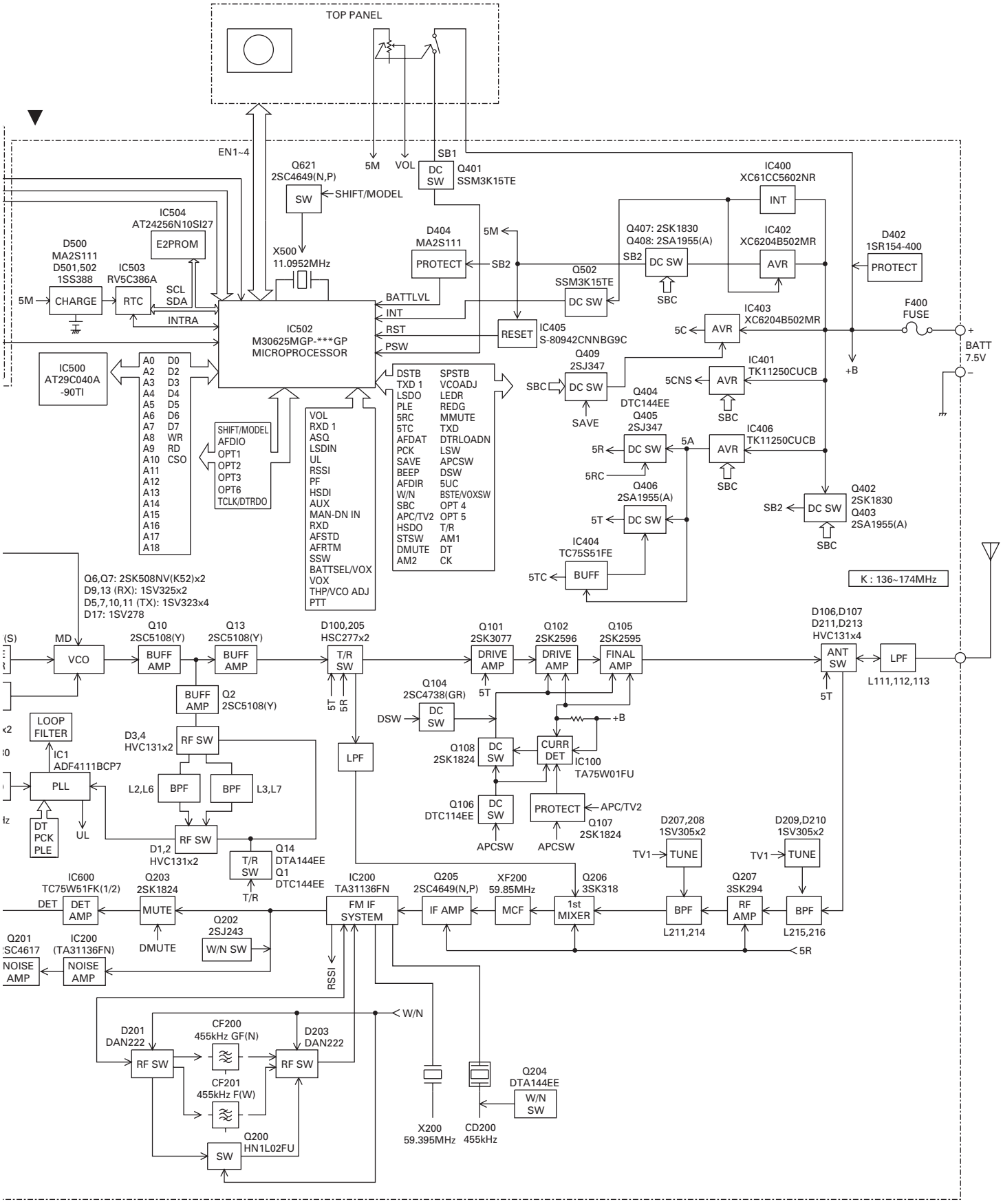

LEVEL DIAGRAM

Receiver Section

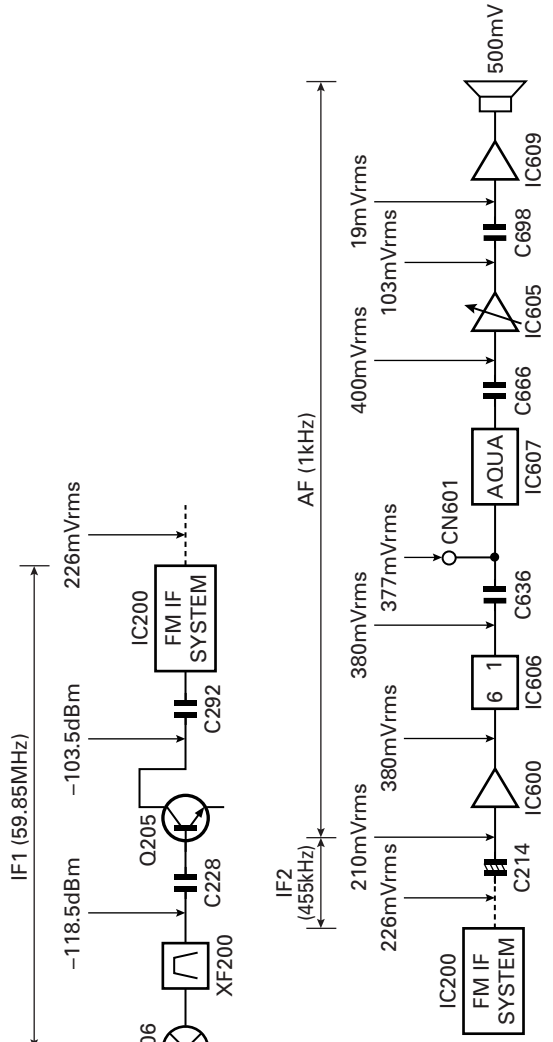

To make measurements in the AF section, connect the AC level meter.
(ANT input : –53dB, 1kHz FM, 3kHz DEV (Wide))
In the RF section, use a 1000pF coupling capacitor.
(The display shows the SSG input value required to obtain 12dB SINAD without local level.)

Transmitter Section

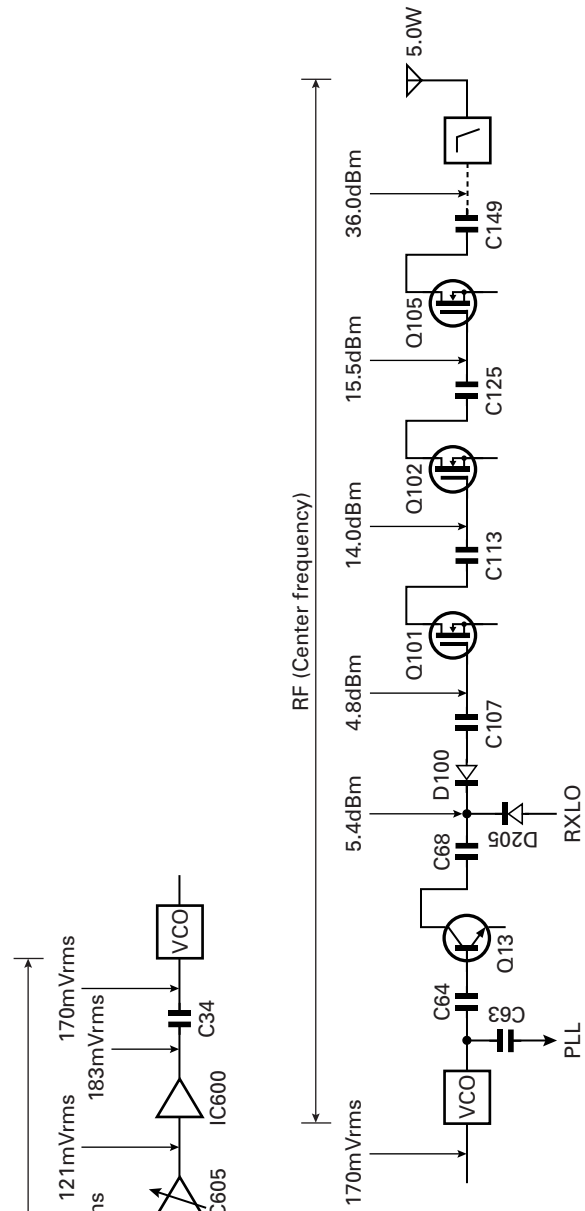

AG is set to the MIC input becomes 3kHz DEV at 1kHz MOD (Wide).
To make measurements in the AF section, connect the AC level meter.
In the RF section, use a 1000pF coupling capacitor.

OPTIONAL ACCESSORIES

KNB-31A (Ni-Cd 7.2V 1700mAh)
KNB-32N (Ni-MH 7.2V 2500mAh)

■ **External view**

■ **KNB-31A Internal wiring**

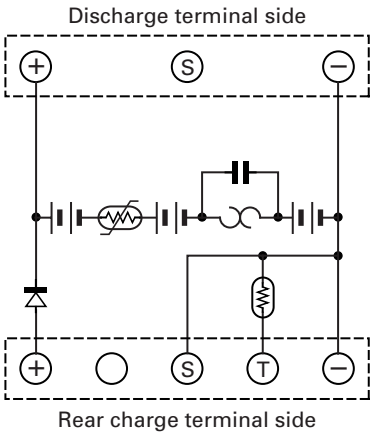

■ **KNB-32N Internal wiring**

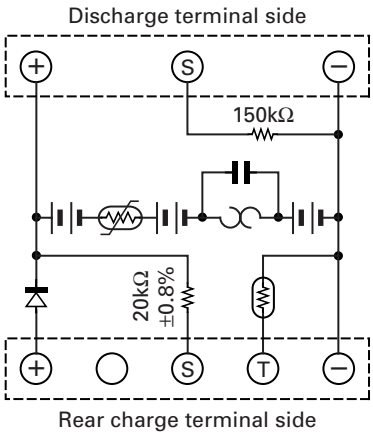

KNB-33L (Li-ion 7.4V 1700mAh)

■ **External view**

■ **Internal wiring**

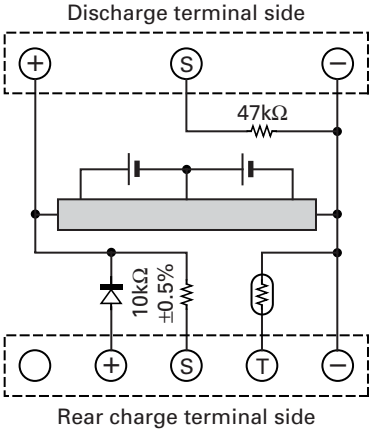

KSC-32 (Rapid charger)

■ **External view**

SPECIFICATIONS

GENERAL

Frequency range	136~174MHz
Number of channels	Zone : Max. 128 per radio Ch/GID : Max. 250 per zones (Max. 512 [Conv. Ch's + GID's] total per radio)
Channel spacing	Wide : 25, 30kHz Narrow : 12.5, 15kHz
Battery voltage	7.5V DC ±20%
Battery life (5-5-90 duty cycle)/Approx. hours	
KNB-31A (1700mAh)	9
KNB-32N (2500mAh)	14
KNB-33L (1700mAh)	10
Operating temperature range	–22°F~+140°F (–30°C~+60°C)
Frequency stability	±0.00025% (–22°F~+140°F)
Antenna impedance	50Ω
Channel frequency spread	38MHz
Dimensions (W x H x D)	2-5/16 x 5-6/16 x 1-5/16 in. (58 x 136 x 33 mm) with KNB-33L battery
(Projections not included)	2-5/16 x 5-6/16 x 1-9/16 in. (58 x 136 x 39.5 mm) with KNB-31A or 32N battery
Weight (net)	14.1 oz. (400 g) with battery (KNB-33L), antenna (KRA-22) and beltclip (KBH-11)

RECEIVER (Measurements made per EIA/TIA-603)

Sensitivity (12dB SINAD)	Wide : 0.25μV Narrow : 0.28μV
Selectivity	Wide : 70dB Narrow : 65dB
Intermodulation distortion	W/N : 70dB (±50, 100kHz)
Spurious response	70dB
Audio output (8Ω impedance)	500mW with less than 3% distortion

TRANSMITTER (Measurements made per EIA/TIA-603)

RF power output	HI : 5W LO : 1W
Spurious response	70dB
Modulation	Wide : 16K0F3E Narrow : 11K0F3E
FM hum & noise	Wide : 45dB Narrow : 40dB
Audio distortion	W/N : 3%

KENWOOD CORPORATION
2967-3, Ishikawa-machi, Hachioji-shi, Tokyo, 192-8525 Japan

KENWOOD U.S.A. CORPORATION
P.O. BOX 22745, 2201 East Dominguez Street, Long Beach, CA 90801-5745, U.S.A.

KENWOOD ELECTRONICS CANADA INC.
6070 Kestrel Road, Mississauga, Ontario, Canada L5T 1S8

KENWOOD ELECTRONICS DEUTSCHLAND GMBH
Rembrücker Str. 15, 63150 Heusenstamm, Germany

KENWOOD ELECTRONICS BELGIUM N.V.
Leuvensesteenweg 248 J, 1800 Vilvoorde, Belgium

KENWOOD ELECTRONICS FRANCE S.A.
13, Boulevard Ney, 75018 Paris, France

KENWOOD ELECTRONICS U.K. LIMITED
KENWOOD House, Dwight Road, Watford, Herts., WD18 9EB United Kingdom

KENWOOD ELECTRONICS EUROPE B.V.
Amsterdamseweg 37, 1422 AC Uithoorn, The Netherlands

KENWOOD ELECTRONICS ITALIA S.p.A.
Via G. Sirtori, 7/9 20129 Milano, Italy

KENWOOD IBERICA S.A.
Bolivia, 239-08020 Barcelona, Spain

KENWOOD ELECTRONICS AUSTRALIA PTY. LTD.
(A.C.N. 001 499 074)
16 Giffnock Avenue, Centrecourt Estate, North Ryde, N.S.W. 2113 Australia

KENWOOD ELECTRONICS (HONG KONG) LTD.
Unit 3712-3724, Level 37, Tower one Metroplaza, 223 Hing Fong Road, Kwai Fong, N.T., Hong Kong

KENWOOD ELECTRONICS SINGAPORE PTE LTD.
1 Genting Lane #07-00 Kenwood Building, Singapore 349544

100%