Service Manual

Tuner/Amplifier

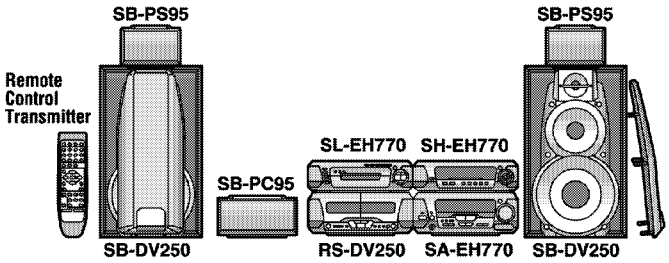

SA-EH770

Colour

(S).....Silver Type

Areas

(E).....Europe.

(EB).....Great Britain.

(EG).....Germany, Italy, France, Netherlands and Denmark.

(EP).....East Europe and CIS.

Because of unique interconnecting cables, when a component requires service, send or bring in the entire system.

System	SC-EH770
Sound Processor	SH-EH770
Tuner/Amplifier	**SA-EH770**
CD Changer	SL-EH770
Cassette Deck	RS-DV250
Front Speakers*	SB-DV250
Center Speaker*	SB-PC95
Surround Speakers*	SB-PS95

* : Made in Spain.

Specifications

Amplifier section

Power output (L/R both channel driven):

Stereo mode;

DIN	**1 kHz, THD 1 % (High);**		2 × 25 W (6 Ω)
	100 Hz, THD 1 % (Low);		2 × 45 W (8 Ω)
RMS	**1 kHz, THD 10 % (High);**		2 × 35 W (6 Ω)
	100 Hz, THD 10 % (Low);		2 × 65 W (8 Ω)

PRO LOGIC mode;

DIN	**FRONT**	**1 kHz, THD 1 % (High);**	2 × 25 W (6 Ω)
		100 Hz, THD 1 % (Low);	2 × 45 W (8 Ω)
	SURROUND	**1 kHz, THD 1 %;**	2 × 30 W (8 Ω)
	CENTER	**1 kHz, THD 1 %;**	60 W (8 Ω)
RMS	**FRONT**	**1 kHz, THD 10 % (High);**	2 × 35 W (6 Ω)
		100 Hz, THD 10 % (Low);	2 × 65 W (8 Ω)
	SURROUND	**1 kHz, THD 10%;**	2 × 40 W (8 Ω)
	CENTER	**1 kHz, THD 10 %;**	80 W (8 Ω)

PMPO 1 kHz; 3,000 W (High 6 Ω, Low, CENT., SURR. 8 Ω)

Total harmonic distortion:

Rated power at 1 kHz;	1 % (6 Ω)
Half power at 1 kHz;	0.1 % (6 Ω)

Load impedance:

FRONT (High);	6 Ω
(Low);	8 Ω
SURROUND;	8 Ω
CENTER;	8 Ω

DIGITAL S.WOOFER:

Center frequency;	60 Hz
LEVEL (VOL–20 dB);	MID +3 dB, MAX +6 dB

FM tuner section

Frequency range:	87.50 – 108.00 MHz (0.05 MHz steps)
Sensitivity:	1.8 µV (IHF usable)
S/N 26 dB:	1.5 µV
S/N (MONO):	70 dB (75 dB, IHF)
Antenna terminal(s):	75 Ω (unbalanced)

AM tuner section

Frequency range:	522 – 1629 kHz (9 kHz steps) 520 – 1630 kHz (10 kHz steps)
Sensitivity (S/N 20 dB):	500 µV/m

Timer section

Clock:	Quartz - lock type
Function:	Play timer (1 time, daily), Rec timer (1 time, daily), Sleep (120 min, 30 min intervals)
Setting intervals (Play/Rec):	1 minute – 23 hours 59 minutes (1 min intervals)

General

Power supply:	
(E), (EG), (EP) areas;	AC 230 V, 50 Hz
(EB) area;	AC 230 – 240 V, 50 Hz
Power consumption:	190 W
Standby;	0.5 W
Dimensions (W×H×D):	293x118.5x343 mm
Mass:	5.2 kg

Notes: Specifications are subject to change without notice.
Mass and dimensions are approximate.
Total harmonic distortion is measured by the digital spectrum analyzer.

Technics®

© 2001 Matsushita Electric Industrial Co., Ltd. All rights reserved. Unauthorized copying and distribution is a violation of law.

⚠ WARNING

This service information is designed for experienced repair technicians only and is not designed for use by the general public.
It does not contain warnings or cautions to advise non-technical individuals of potential dangers in attempting to service a product.
Products powered by electricity should be serviced or repaired only by experienced professional technicians. Any attempt to service or repair the product or products dealt with in this service information by anyone else could result in serious injury or death.

CONTENTS

Page

1 Before Repairs ---- 2
2 Protection Circuitry ---- 2
3 Accessories ---- 3
4 Caution for AC Mains Lead ---- 4
5 Location of Controls ---- 5
6 Operation Checks and Component Replacement Procedures 6
6.1. Checking for the AC IN P.C.B. ---- 6
6.2. Checking for the operation P.C.B. ---- 6
6.3. Checking for the main P.C.B. ---- 7
6.4. Replacement for the regulator transistor ---- 8
6.5. Replacement for the power IC ---- 8
7 To Supply Power Source ---- 9
8 Self-Diagnostic Function ---- 10
8.1. To display the malfunction code ---- 10
8.2. To return to the normal display ---- 10
8.3. Display contents ---- 10
9 Schematic Diagram Notes ---- 11
10 Schematic Diagram ---- 12
11 Printed Circuit Board Diagram ---- 21
12 Type Illustration of ICs, Transistors and Diodes ---- 24
13 Wiring Connection Diagram ---- 25
14 Block Diagram ---- 26
15 Terminal Function of ICs ---- 31
15.1. IC901 (C2BBFD000297):System Control/FL Drive ---- 31
16 Replacement Parts List ---- 32
17 Cabinet Parts Location ---- 36
18 Packaging ---- 37

1 Before Repairs

1. Turn off the power supply. Using a 10 Ω, 10 W resistor, connect both ends of power supply capacitors (C701, C703 and C702, C704) in order to discharge the voltage.
2. Before turning the power supply on, after completion of repair, slowly apply the primary voltage by using a power supply voltage controller to make sure that the consumed current at 50 Hz in NO SIGNAL mode should be shown below with respect to supply voltage 230/240 V.

Power supply voltage	AC 230 V	AC 240 V
Consumed current 50 Hz	100 ~ 350 mA	

2 Protection Circuitry

The protection circuitry may have operated if either of the following conditions is noticed:

- No sound is heard when the power is switched ON.
- Sound stops during a performance.

The functions of this circuitry is to prevent circuitry damage if, for example, the positive and negative speaker connection wires are shorted, or if speaker systems with an impedance less than the indicated rated impedance of this unit are used.

If this occurs, follow the procedures outlined below.

1. Switch OFF the power.
2. Determine the cause of the problem and correct it.
3. Switch ON the power once again.

Note:

When the protection circuitry functions, the unit will not operate unless the power is first switched OFF and then ON again.

3 Accessories

- AC power supply cord for (E), (EG), (EP) areas
  (RJA0019-1X).....1 pc.

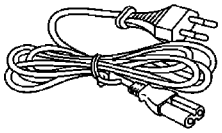

- AC power supply cord for (EB) area
  (RJA0053-2X).....1 pc.

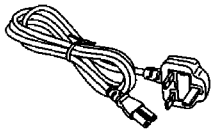

- AM loop antenna set
  (RSA0022-L).....1 pc.

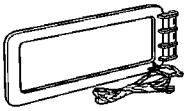

- FM indoor antenna
  (RSA0007).....1 pc.

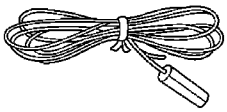

- Speaker cords
  (REE0853).....2 pcs.
  (REE1057).....2 pcs.

- Remote control transmitter
  (EUR7702050).....1 pc.

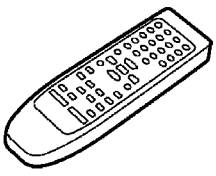

- Remote control batteries
  (R6/LR6, “AA”, UM-3).....2 pcs.

  Note: These are available on sales route.

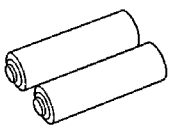

- Antenna plug adaptor for (EB) area only
  (SJP9009).....1 pc.

4 Caution for AC Mains Lead

(For United Kingdom)

("EB" area code model only)

For your safety, please read the following text carefully.

This appliance is supplied with a moulded three pin mains plug for your safety and convenience.
A 5-ampere fuse is fitted in this plug.
Should the fuse need to be replaced please ensure that the replacement fuse has a rating of 5-ampere and that it is approved by ASTA or BSI to BS1362.
Check for the ASTA mark or the BSI mark on the body of the fuse.

If the plug contains a removable fuse cover you must ensure that it is refitted when the fuse is replaced.
If you lose the fuse cover the plug must not be used until a replacement cover is obtained.
A replacement fuse cover can be purchased from your local dealer.

CAUTION!
IF THE FITTED MOULDED PLUG IS UNSUITABLE FOR THE SOCKET OUTLET IN YOUR HOME THEN THE FUSE SHOULD BE REMOVED AND THE PLUG CUT OFF AND DISPOSED OF SAFELY.
THERE IS A DANGER OF SEVERE ELECTRICAL SHOCK IF THE CUT OFF PLUG IS INSERTED INTO ANY 13-AMPERE SOCKET.

If a new plug is to be fitted please observe the wiring code as shown below.
If in any doubt please consult a qualified electrician.

IMPORTANT

The wires in this mains lead are coloured in accordance with the following code:
Blue: Neutral, Brown: Live.
As these colours may not correspond with the coloured markings identifying the terminals in your plug, proceed as follows:
The wire which is coloured Blue must be connected to the terminal which is marked with the letter N or coloured Black or Blue.
The wire which is coloured Brown must be connected to the terminal which is marked with the letter L or coloured Brown or Red.

WARNING: DO NOT CONNECT EITHER WIRE TO THE EARTH TERMINAL WHICH IS MARKED WITH THE LETTER E, BY THE EARTH SYMBOL ⏚ OR COLOURED GREEN OR GREEN/YELLOW.

THIS PLUG IS NOT WATERPROOF—KEEP DRY.

Before use

Remove the connector cover.

How to replace the fuse

The location of the fuse differ according to the type of AC mains plug (figures A and B). Confirm the AC mains plug fitted and follow the instructions below.
Illustrations may differ from actual AC mains plug.

1. Open the fuse cover with a screwdriver.

Figure A

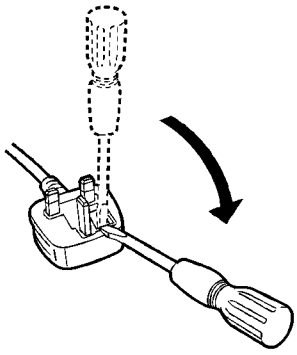

Figure B

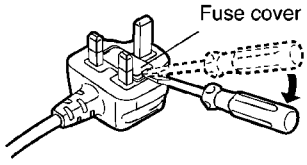

2. Replace the fuse and close or attach the fuse cover.

Figure A

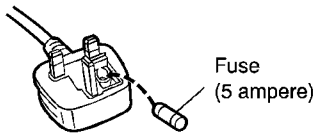

Figure B

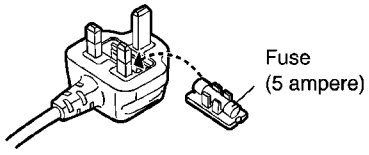

5 Location of Controls

A

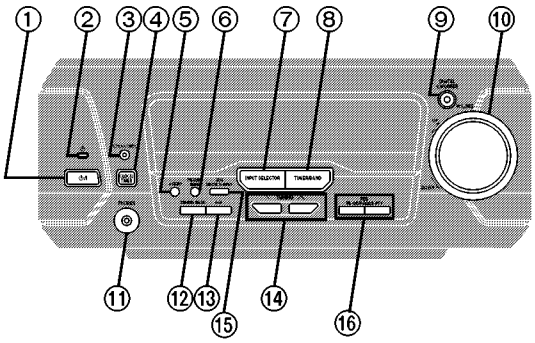

B

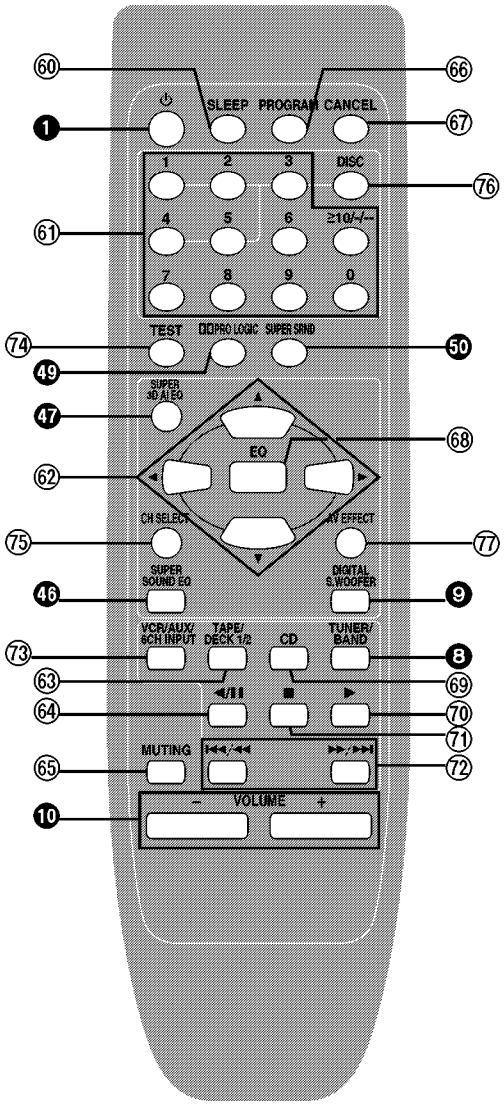

A Tuner/amplifier

① **Standby/on switch (⏻/I)**
Press to switch the unit from on to standby mode or vice versa. In standby mode, the unit is still consuming a small amount of power.

② **Standby indicator (⏻)**
When the unit is connected to the AC mains supply, this indicator lights up in standby mode and goes out when the unit is turned on.

③ **Play timer/record timer button and indicator (◴PLAY/◴REC)**
④ **Clock/timer button (CLOCK/TIMER)**
⑤ **Demo button (▬ DEMO)**
⑥ **FM mode button (FM AUTO/MONO)**
⑦ **Source input button (INPUT SELECTOR)**
⑧ **Tuner/band button (TUNER/BAND)**
⑨ **Digital super woofer button and indicator (DIGITAL S.WOOFER)**
⑩ **Volume control (VOLUME)**
⑪ **Headphone jack (PHONES)**
⑫ **Tuning mode button (TUNING MODE)**
⑬ **Set button (SET)**
⑭ **Tuning buttons (∨, ∧ TUNING)**
⑮ **6ch discrete input button (6CH DISCRETE INPUT)**
⑯ **RDS display mode button (RDS, PS–DISP MODE–PTY)**

B Remote control

Buttons such as ❶ function in the same way as the controls on the main unit.

⑥⓪ **Sleep timer button (SLEEP)**
⑥① **Numbered buttons (1–9, 0, ≥10/-/--)**
⑥② **Cursor buttons (◀, ▶, ▲, ▼)**
⑥③ **Tape select, deck 1/deck 2 select button (TAPE/DECK 1/2)**
⑥④ **CD pause/tape reverse playback button (◀/❚❚)**
⑥⑤ **Muting button (MUTING)**
⑥⑥ **Program button (PROGRAM)**
⑥⑦ **Cancel button (CANCEL)**
⑥⑧ **EQ button (EQ)**
⑥⑨ **CD button (CD)**
⑦⓪ **CD play/tape forward playback button (▶)**
⑦① **CD/tape stop button (■)**
⑦② **CD skip/search, tape fast forward/rewind buttons (I◀◀/◀◀, ▶▶/▶▶I)**
⑦③ **Input select button (VCR/AUX/6CH INPUT)**
⑦④ **Test button (TEST)**
⑦⑤ **Channel select button (CH SELECT)**
⑦⑥ **Disc button (DISC)**
⑦⑦ **AV effect button (AV EFFECT)**

6 Operation Checks and Component Replacement Procedures

- **This section describes procedures for checking the operation of the major printed circuit boards and replacing the main components.**
- **For reassembly after operation checks or replacement, reverse the respective procedures. Special reassembly procedures are described only when required.**

6.1. Checking for the AC IN P.C.B.

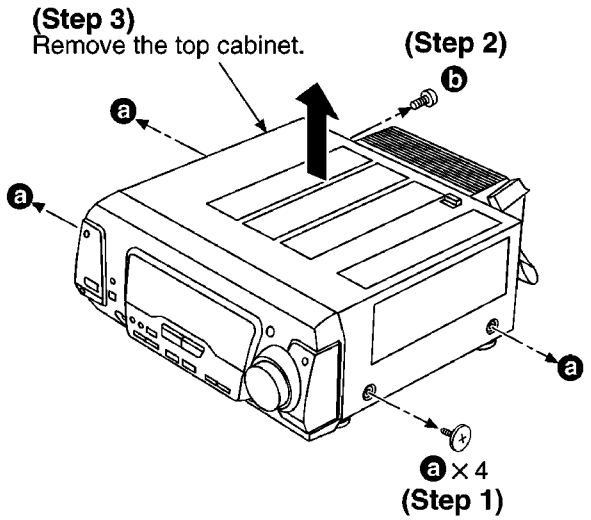

- **Check the AC IN P.C.B. as shown below.**

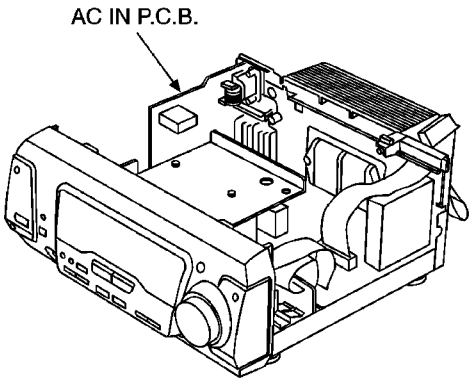

6.2. Checking for the operation P.C.B.

- Follow the **(Step 1)** - **(Step 3)** of item 6.1.

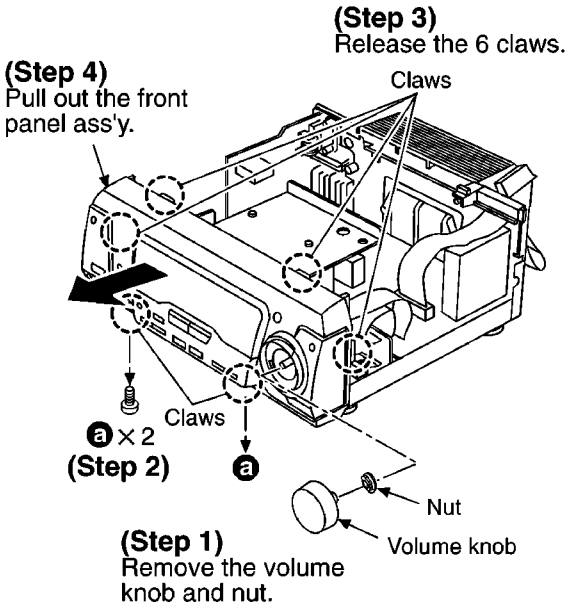

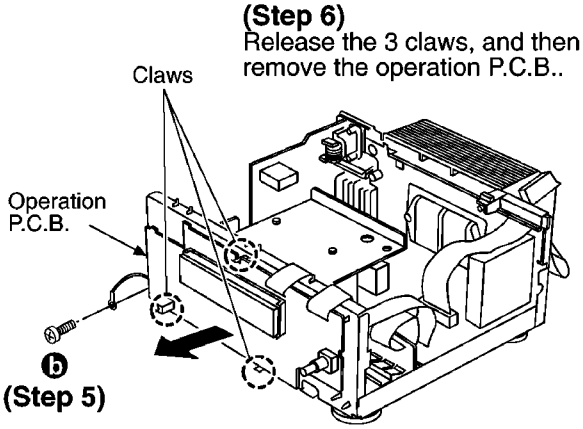

- **Check the operation P.C.B. as shown below.**

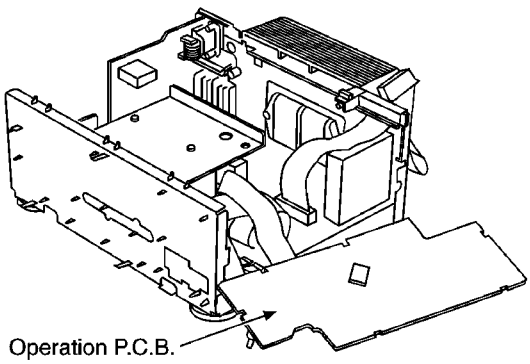

6.3. Checking for the main P.C.B.

- Follow the **(Step 1)** - **(Step 3)** of item 6.1.
- Follow the **(Step 1)** - **(Step 6)** of item 6.2.

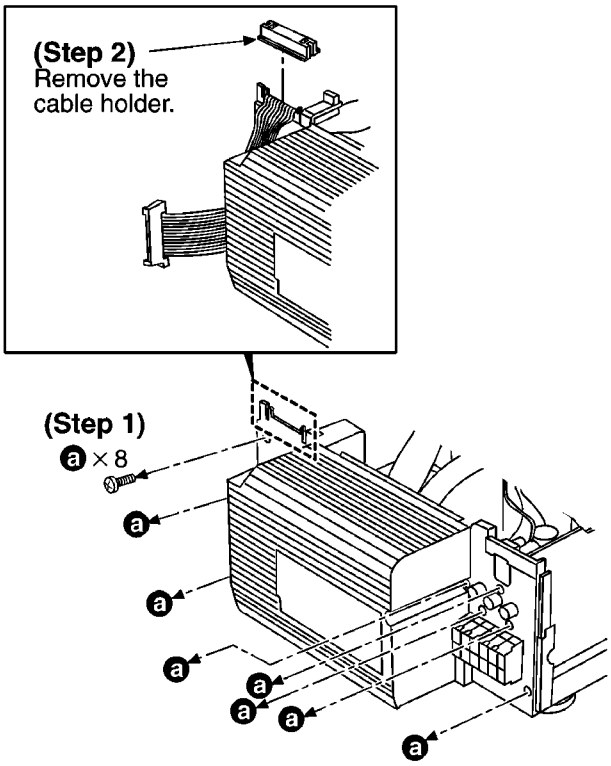

(Step 3)
Release the 2 claws, and then remove the rear grille ass'y.

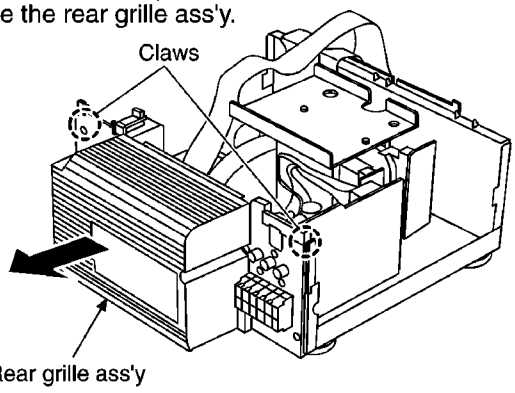

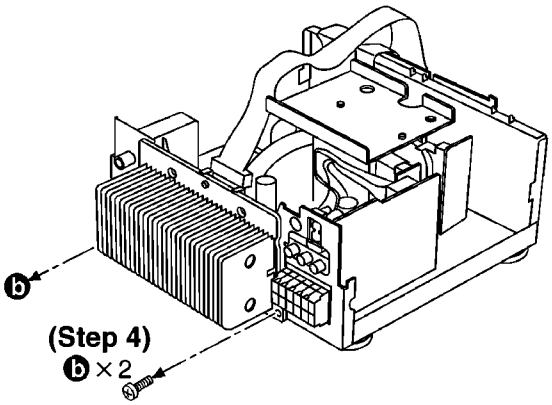

(Step 5)

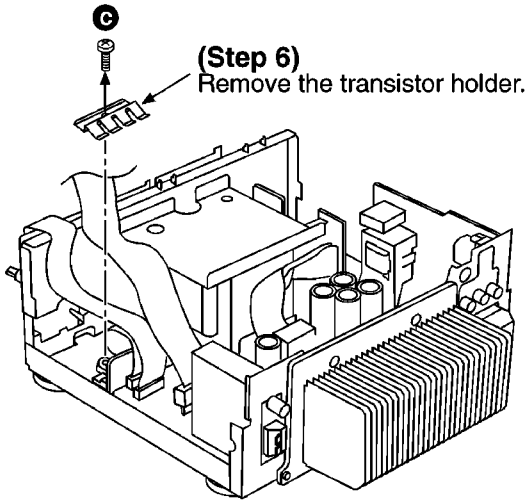

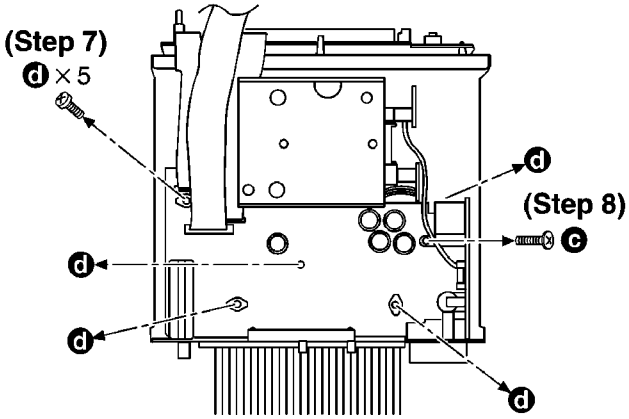

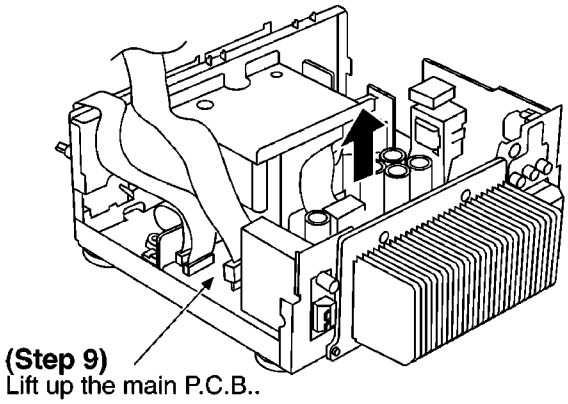

· **Check the main P.C.B. as shown below.**

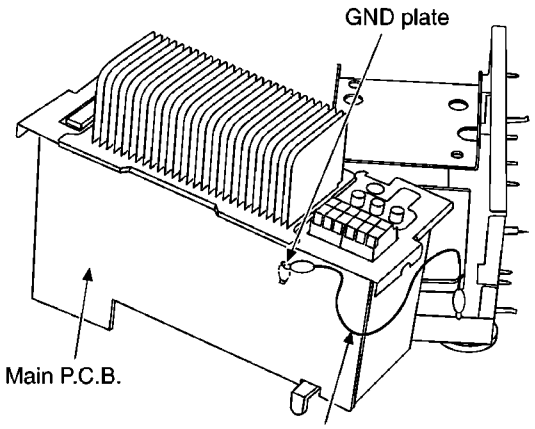

(Step 10)
Connect the lead wire.

6.4. Replacement for the regulator transistor

· Follow the **(Step 1)** - **(Step 3)** of item 6.1.

(Step 1)

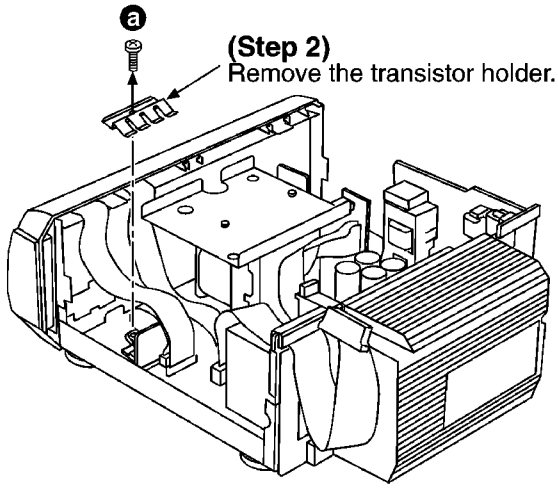

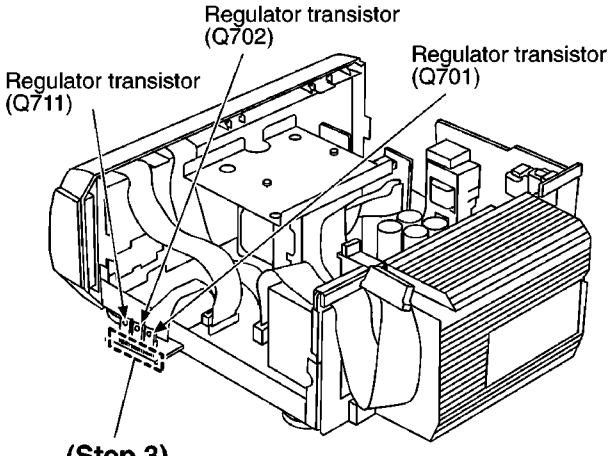

(Step 3)
Unsolder the terminals of regulator transistors.

6.5. Replacement for the power IC

· Follow the **(Step 1)** - **(Step 3)** of item 6.1.

· Follow the **(Step 1)** - **(Step 6)** of item 6.2.

· Follow the **(Step 1)** - **(Step 10)** of item 6.3.

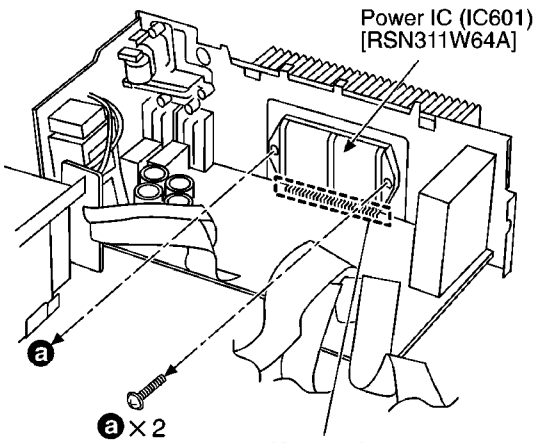

(Step 1)

(Step 2)
Unsolder the terminals of power IC.

NOTE:
When mounting the power IC apply silicone conpound (RFKX0002) to the rear side of power IC.

7 To Supply Power Source

This unit SA-EH770 is designed to operate on power supplied form system connected.
For system connection, refer to Fig. 7-1.

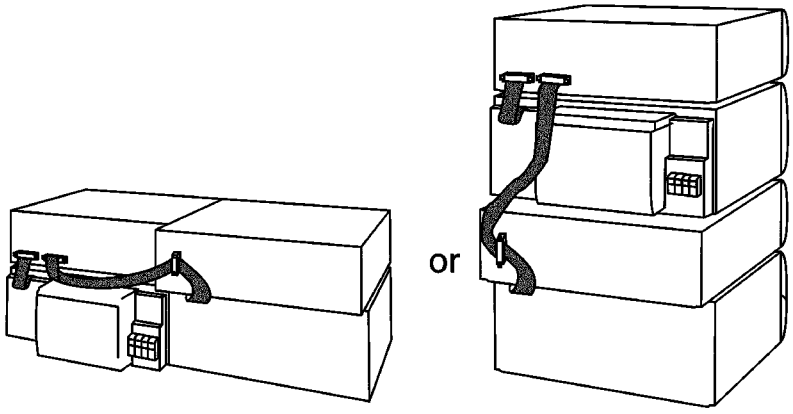

Fig. 7-1.

When the unit SA-EH770 has to test and service alone, use the following method to supply power source.

1. Short the section between **W902A Pin 3** and **C740 (-)** (GND). (Refer to Fig. 7-2.)
2. Connect this unit to an AC power supply cord.
   (This unit come to stand-by mode.)
3. Turn the unit ON.

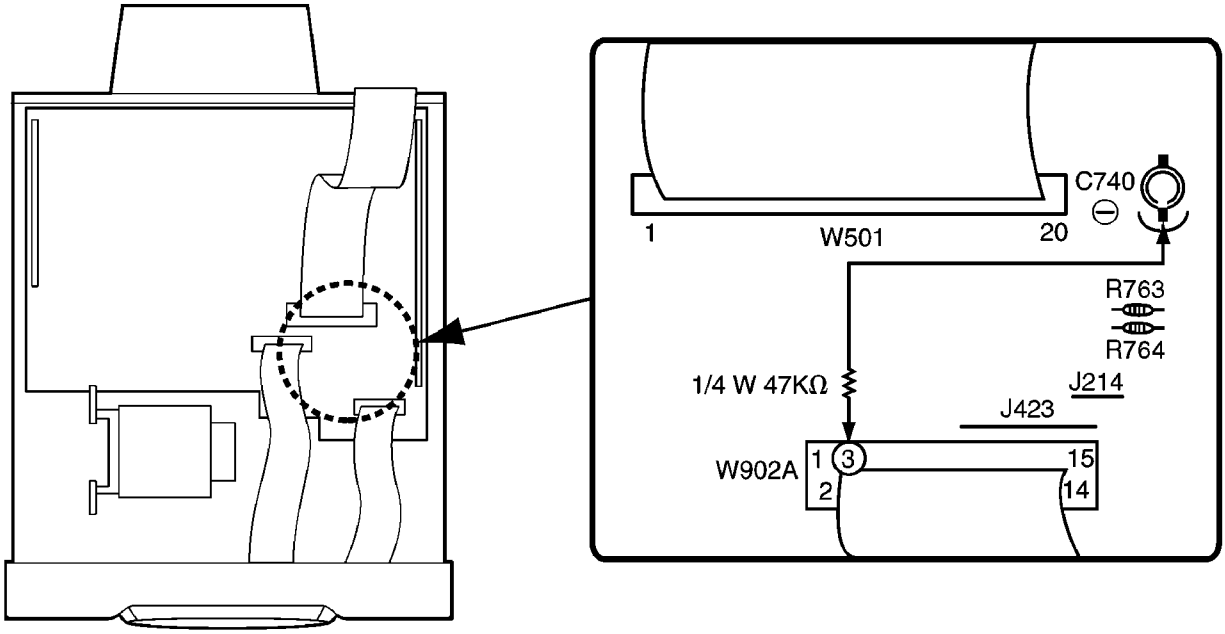

Fig. 7-2.

Notes:

Use only this method when checking the voltage etc..
In case of checking the operations, use the system connections to supply power source.

8 Self-Diagnostic Function

This unit is equipped with a self-diagnostic function which, in the event of a malfunction, automatically displays a code indicating the nature of the malfunction.

Use this self-diagnostic function when servicing the unit.

8.1. To display the malfunction code

U70 CD: Automatically displays on the
U70 DECK: tuner/amplifier when a malfunction occurs. Refer to Fig. 8-1.

F61: Automatically displays on the tuner/amplifier when a malfunction occurs. Refer to Fig. 8-1.

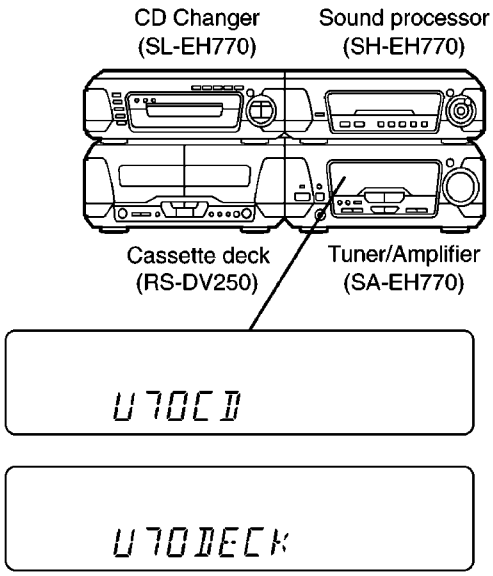

Fig. 8-1.

8.2. To return to the normal display

1. **For U70 CD/U70 DECK**
   - Press an any operation button on the tuner/amplifier.
   - To re-display the code, switch the power off (POWER STANDBY button), and then switch power back on again.
2. **For F61**
   - If F61 is displayed, the power will automatically be switched off and the standby indicator will light up.
   - F61 will be displayed for 3 seconds, and then the clock will be displayed.
   - To re-display the code, switch the power on. F61 will be re-displayed, and then after 3 seconds the clock will be displayed and the power will automatically switch off.

8.3. Display contents

8.3.1. U70 CD, U70 DECK (displayed automatically)

- **Problem or condition**

A bus-line communications error has occurred as a result of the flat cables being inserted incorrectly, thus preventing the system from operating.

– If U70 is displayed on the tuner/amplifier, the tape deck or CD Changer cannot be operated by remote control.

- **Correction Procedure**

1. To check for correct insertion of flat cables.
   – Insert each connectors until you hear a click.
   – Insert the flat cables at the back of the unit in the order indicated. Refer to Fig. 8-2.

   Make sure the white side of the cables is on your right side. Refer to Fig. 8-3.

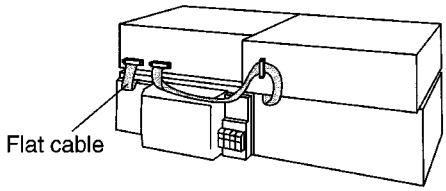

Fig. 8-2.

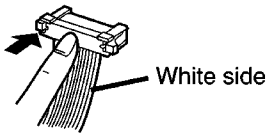

Fig. 8-3.

2. Breakage of flat cables. (Check and replace.)
3. If the problem is not corrected by items 1 and 2 above, this indicates a faulty IC.

   SA-EH770:

   IC901 (C2BBFD000297)

   SL-EH770:

   IC451 (C2BBFD000256)

   RS-DV250:

   IC701 (M38503M2406F)

   Check these ICs and replace.

8.3.2. F61

- **Problem or condition**

When the power switch is switched on, it automatically switches back off, making it impossible to switch power on.

- **Correction procedure**

Faulty Tuner/Amplifier (SA-EH770) output IC (IC601). (When a DC voltage is applied to speaker terminals.)

9 Schematic Diagram Notes

- **This schematic diagram may be modified at any time with the development of new technology.**

Notes:

S901:	Power standby/on switch (⏻ /I)
S902:	Clock/timer switch (CLOCK/TIMER)
S903:	Demo switch (⬬ DEMO)
S904:	Play timer/record timer switch (◴ PLAY/ ◴ REC)
S905:	FM mode switch (FM AUTO/MONO)
S906:	Tuning mode switch (TUNING MODE)
S907:	Set switch (SET)
S908:	Source input switch (INPUT SELECTOR)
S909:	6 ch discrete input switch (6 CH DISCRETE INIPUT)
S910:	Tuning down switch (TUNING, V)
S911:	Tuning up switch (TUNING, Λ)
S912:	Tuner/band switch (TUNER/BAND)
S913:	Digital super woofer switch (DIGITAL S.WOOFER)
S914:	RDS display mode PS switch (RDS DISP MODE-PS)
S915:	RDS display mode PTY switch (RDS DISP MODE-PTY)
VR901:	Volume control VR (VOLUME)

- Indicated voltage values are the standard values for the unit measured by the DC electronic circuit tester (high-impedance) with the chassis taken as standard. Therefore, there may exist some errors in the voltage values, depending on the internal impedance of the DC circuit tester.

  No mark : Power ON (FM or AM)

- Important safety notice:

  Components identified by ⚠ mark have special characteristics important for safety.

  Furthermore, special parts which have purposes of fire-retardant (resistors), high-quality sound (capacitors), low-noise (resistors), etc. are used.

  When replacing any of components, be sure to use only manufacturer´s specified parts shown in the parts list.

- The supply part number is described alone in the replacement parts list.

- **Caution!**

  IC and LSI are sensitive to static electricity.

  Secondary trouble can be prevented by taking care during repair.

  Cover the parts boxes made of plastics with aluminum foil.

  Ground the soldering iron.

  Put a conductive mat on the work table.

  Do not touch the legs of IC or LSI with the fingers directly.

- Voltage and signal line

  : Positive voltage line

  : Negative voltage line

  : AM signal line

  : AM OSC signal line

  : FM signal line

  : FM OSC signal line

  : Audio signal line

10 Schematic Diagram

SCHEMATIC DIAGRAM-1
A OPERATION CIRCUIT

NOTE:
The number which noted at the connectors on the schematic diagram as "SCHEMATIC DIAGRAM-1" or "SCHEMATIC DIAGRAM-2" indicates the schematic diagram serial number located on the left corner in the schematic diagram.

⇒ :AUDIO SIGNAL LINE

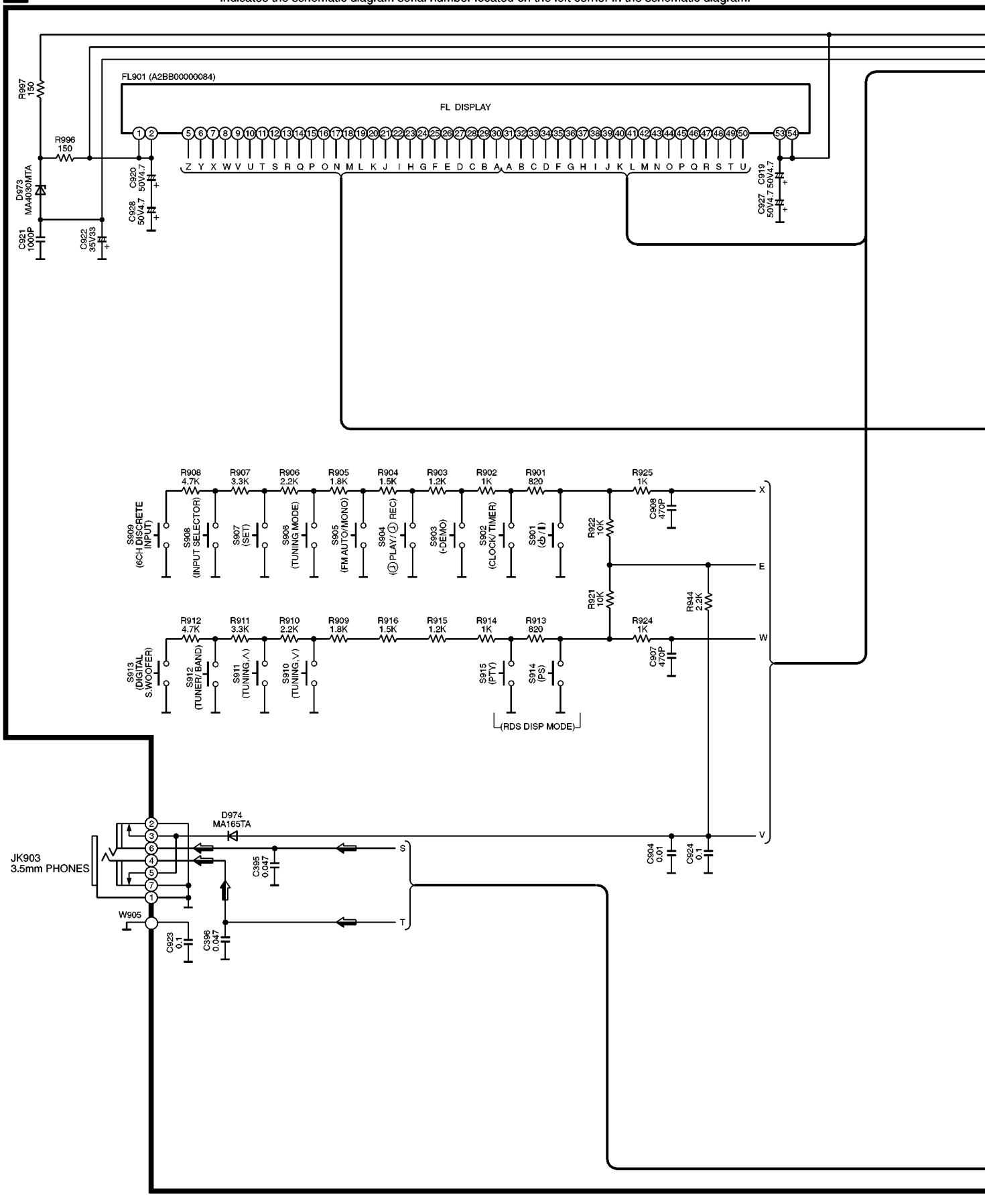

SCHEMATIC DIAGRAM-2

: POSITIVE VOLTAGE LINE : NEGATIVE VOLTAGE LINE

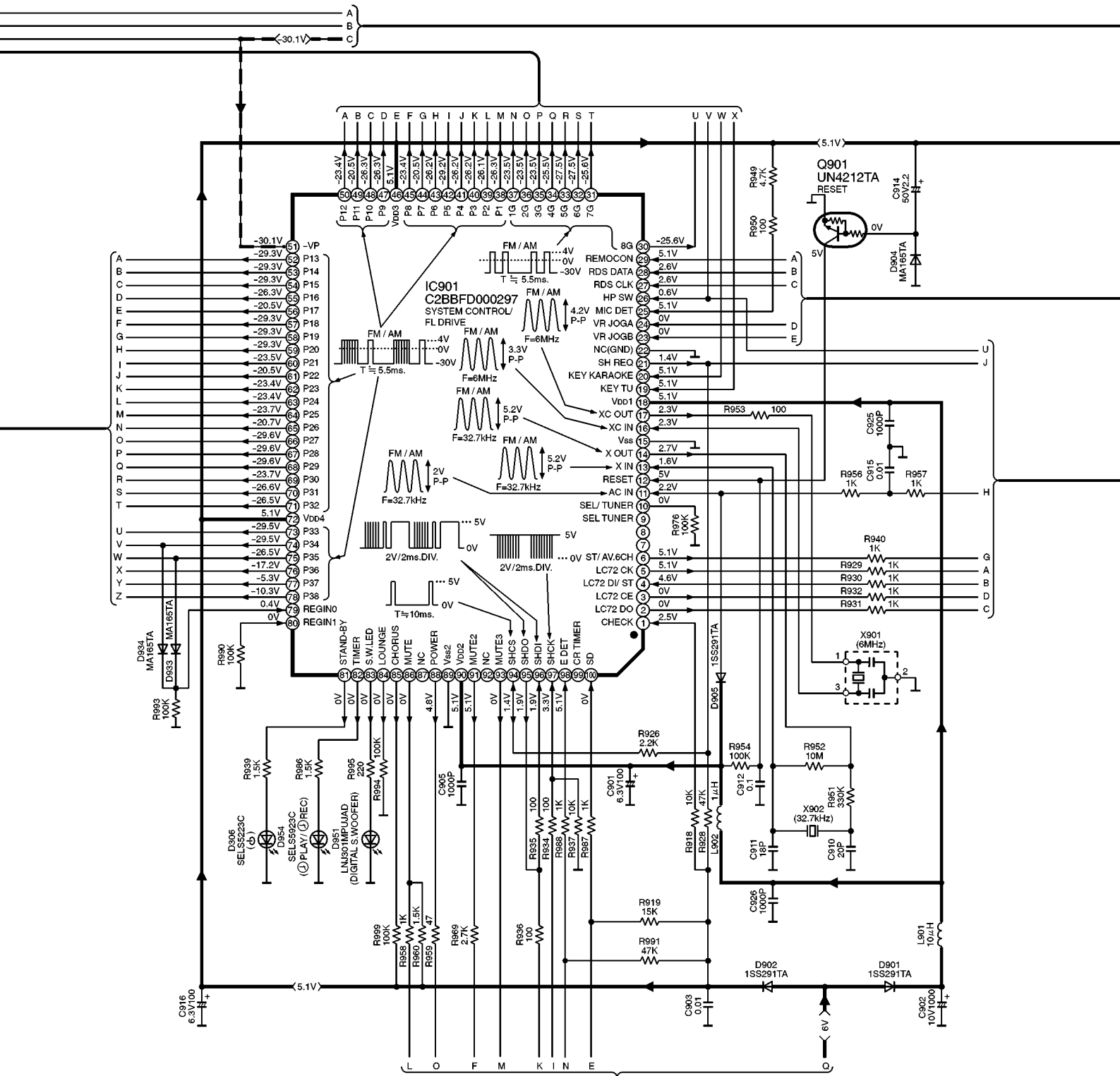

SCHEMATIC DIAGRAM-3

A OPERATION CIRCUIT

: POSITIVE VOLTAGE LINE : NEGATIVE VOLTAGE LINE :AUDIO SIGNAL LINE

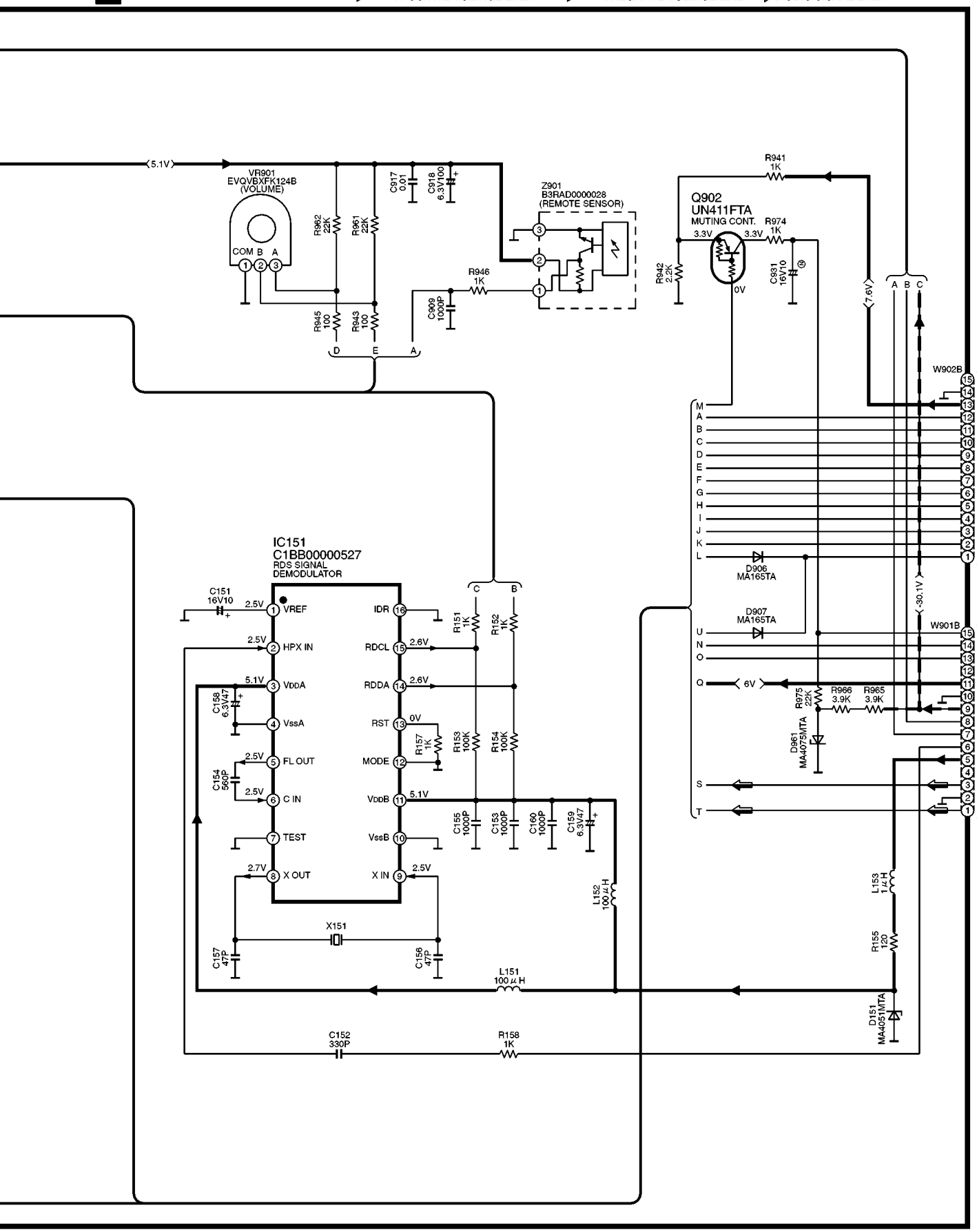

SCHEMATIC DIAGRAM-4

B MAIN CIRCUIT

: POSITIVE VOLTAGE LINE
: NEGATIVE VOLTAGE LINE
: FM SIGNAL LINE
: AM SIGNAL LINE
:AUDIO SIGNAL LINE

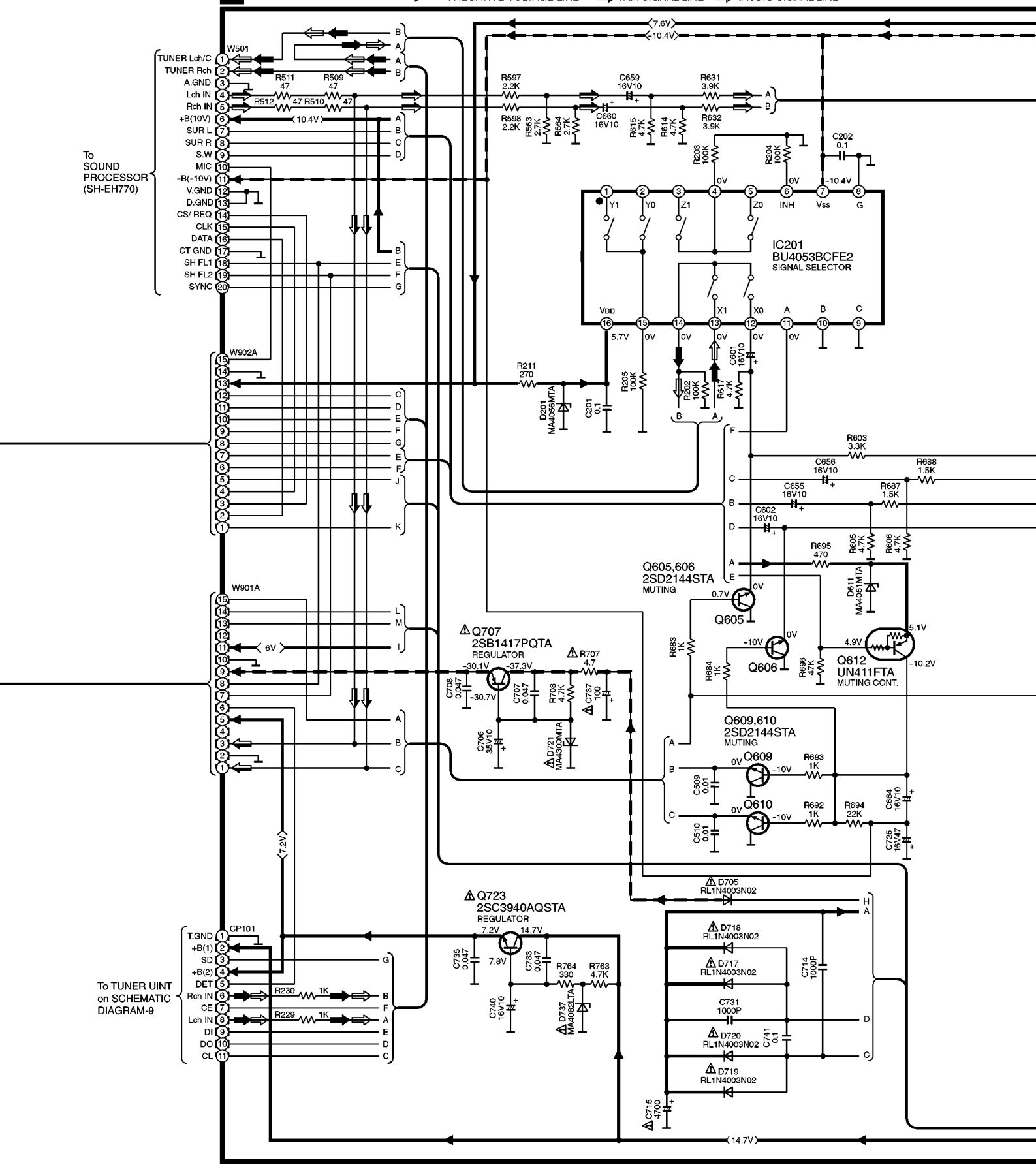

SCHEMATIC DIAGRAM-5

: POSITIVE VOLTAGE LINE
: NEGATIVE VOLTAGE LINE :AUDIO SIGNAL LINE

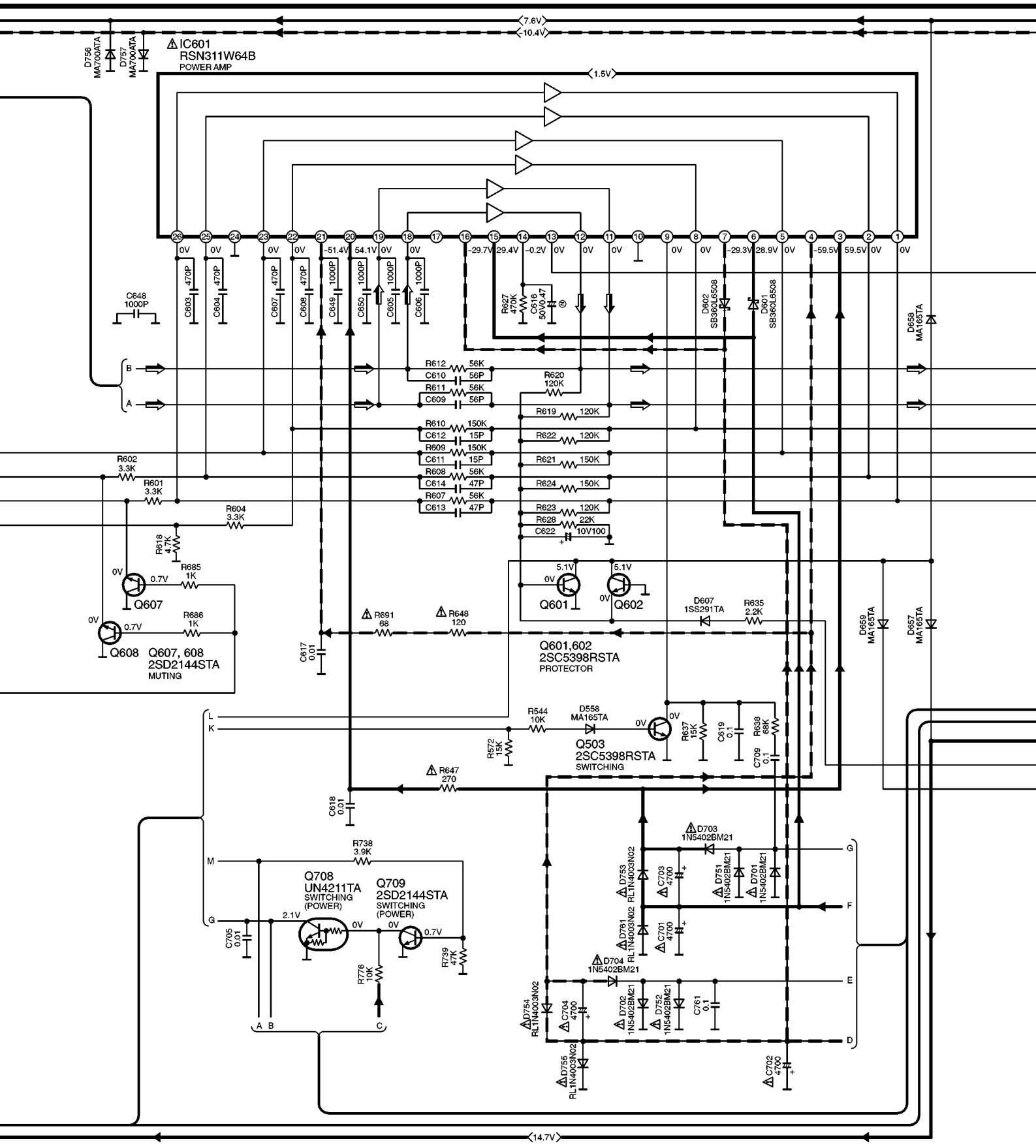

SCHEMATIC DIAGRAM-6

B MAIN CIRCUIT

: POSITIVE VOLTAGE LINE
: NEGATIVE VOLTAGE LINE
:AUDIO SIGNAL LINE

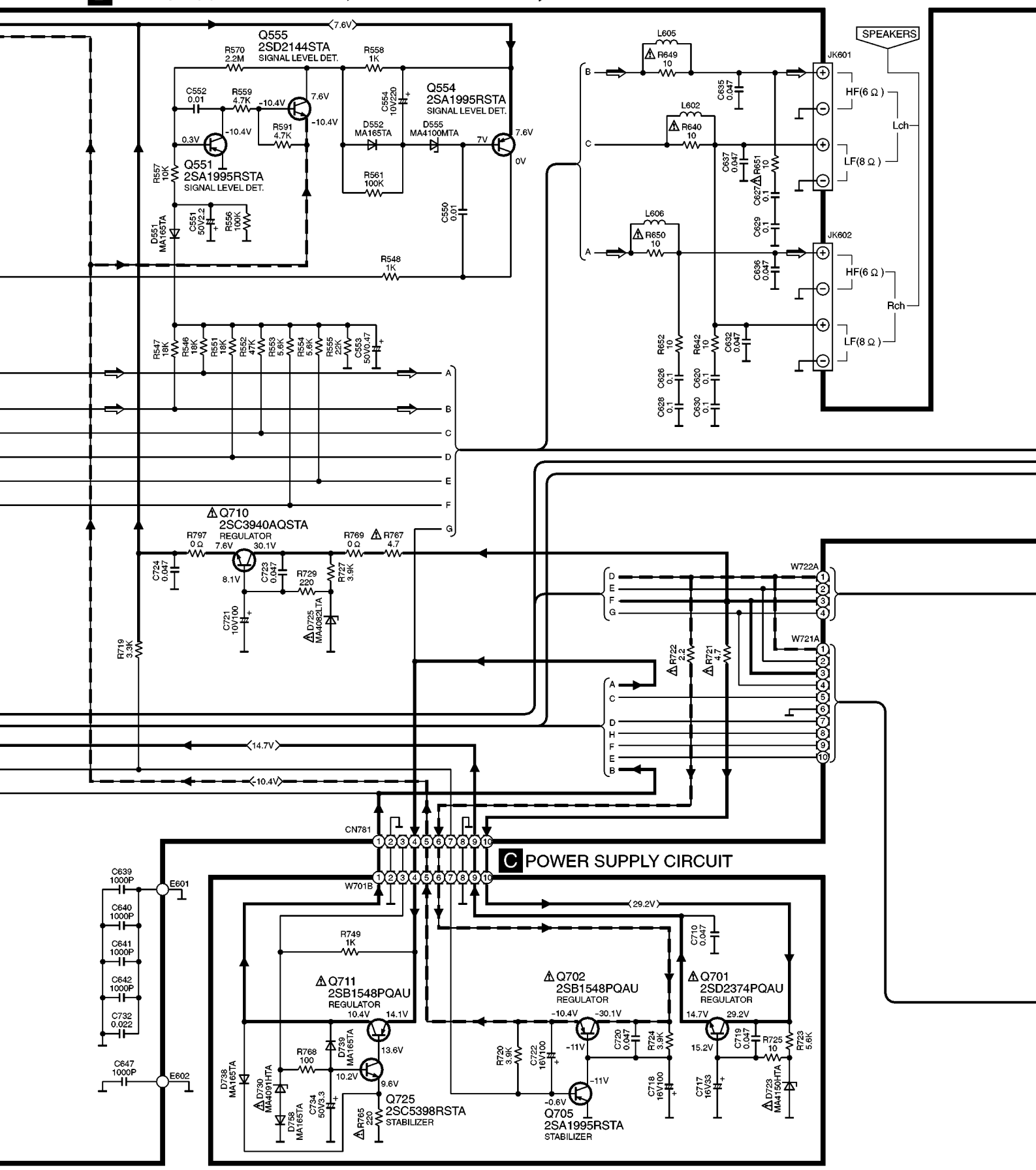

SCHEMATIC DIAGRAM-7

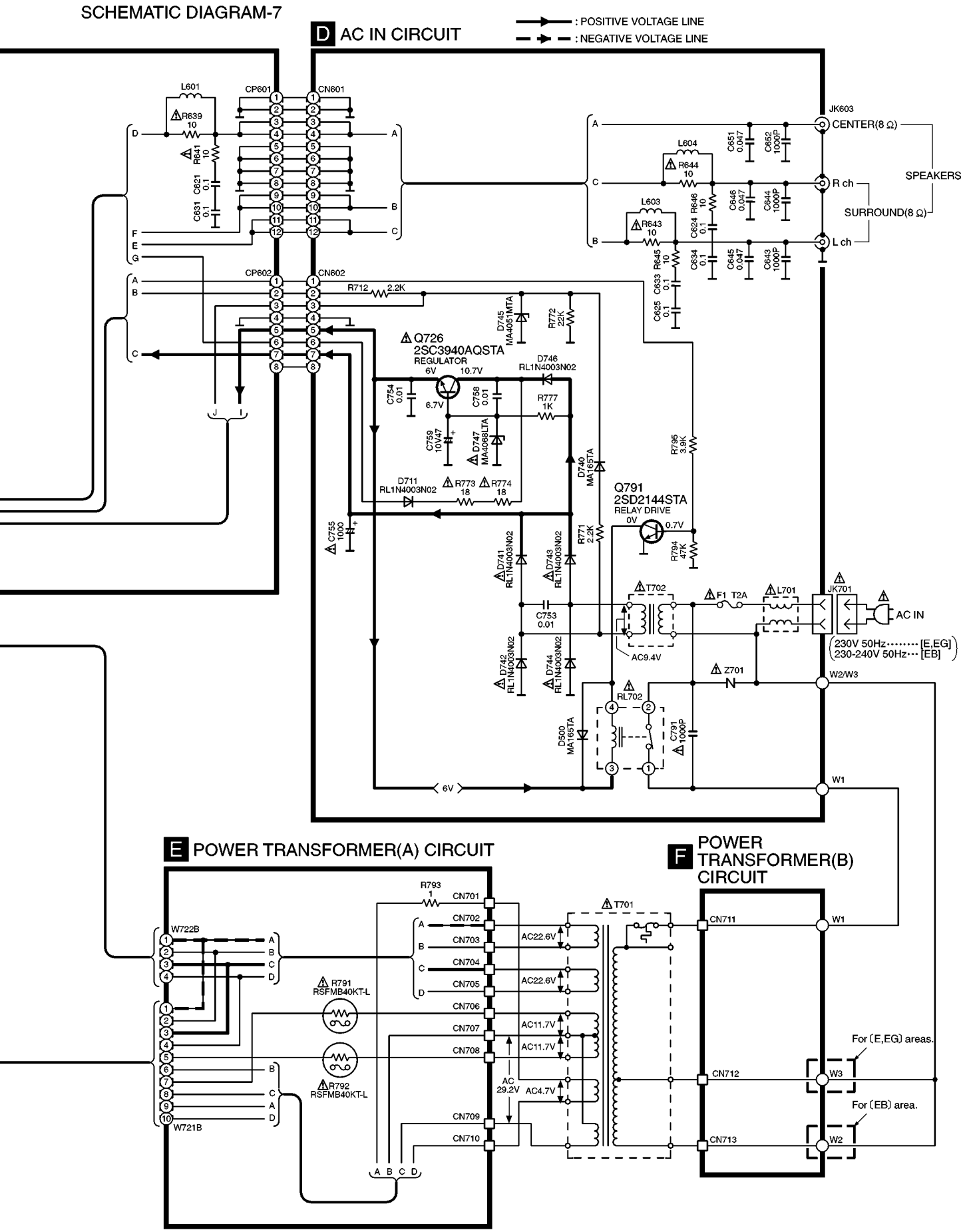

SCHEMATIC DIAGRAM-8

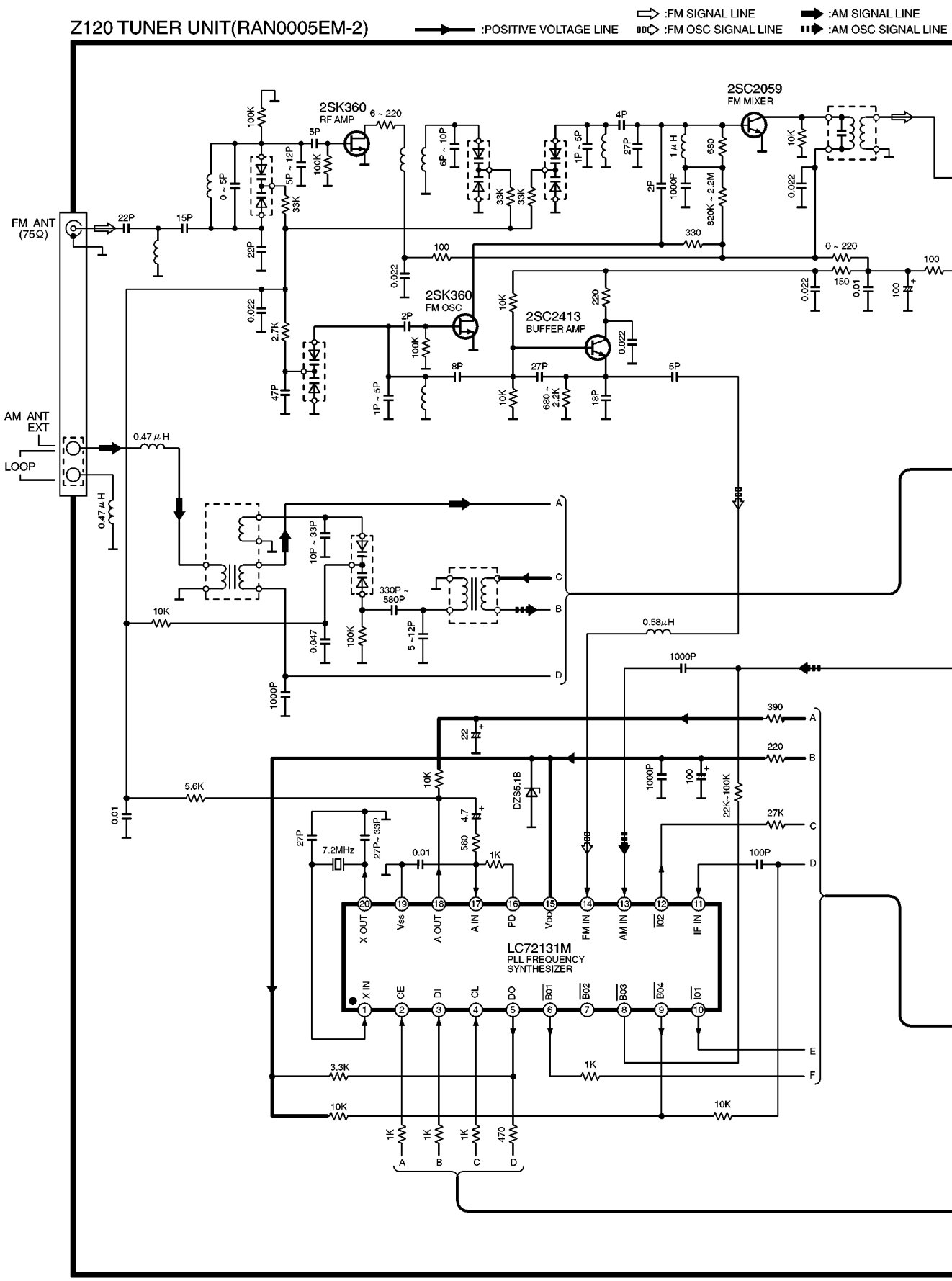

SCHEMATIC DIAGRAM-9

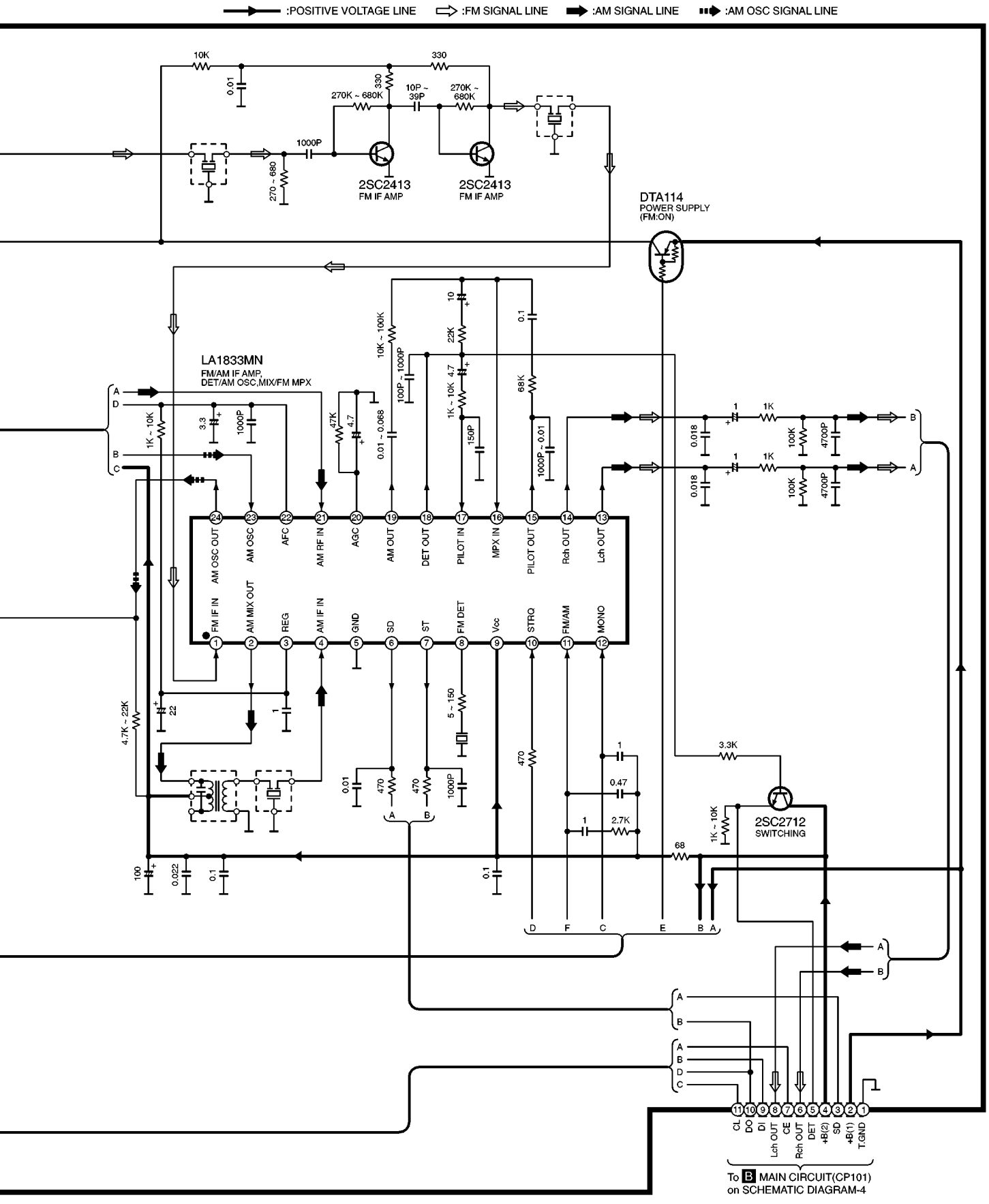

11 Printed Circuit Board Diagram

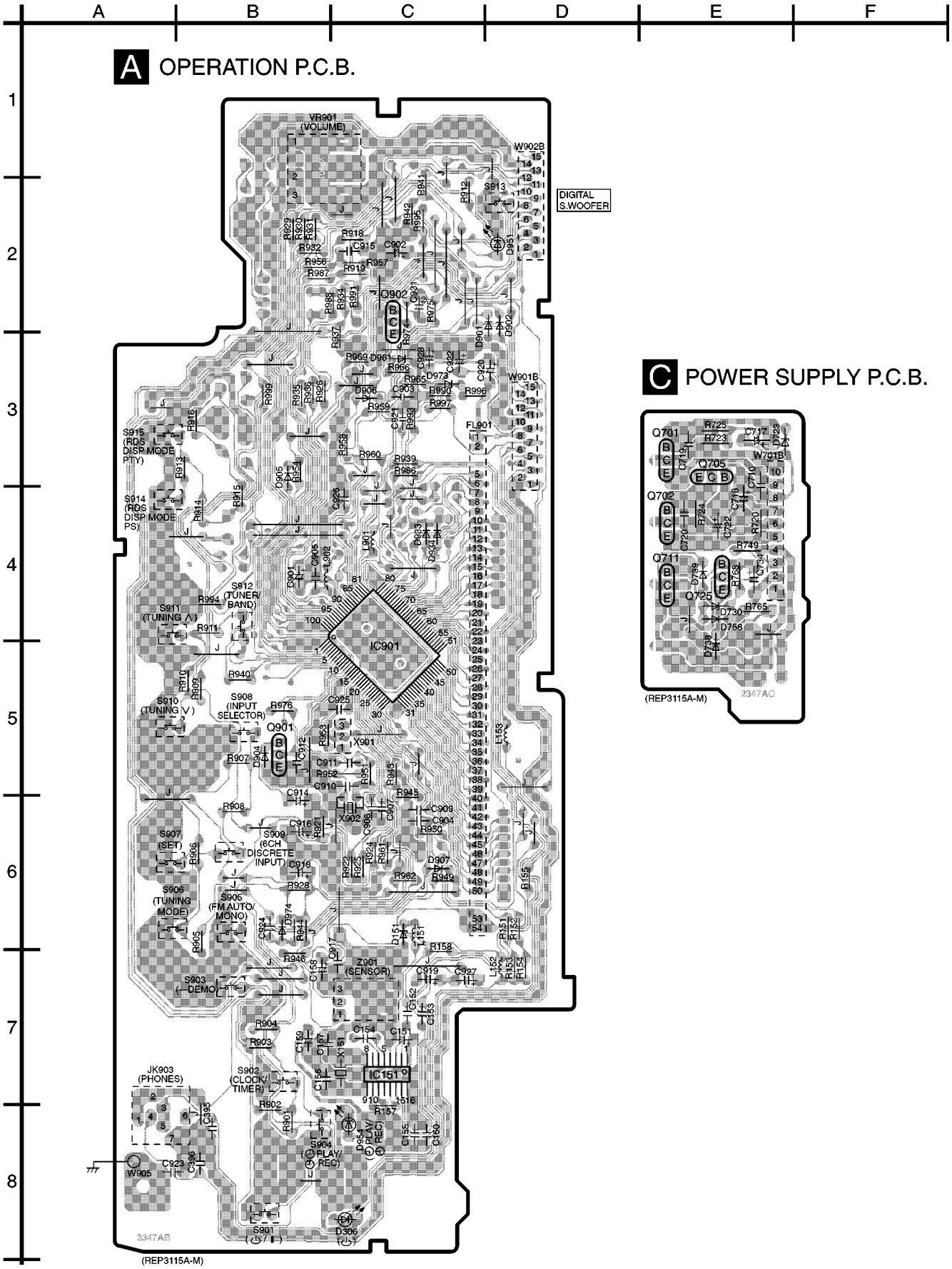

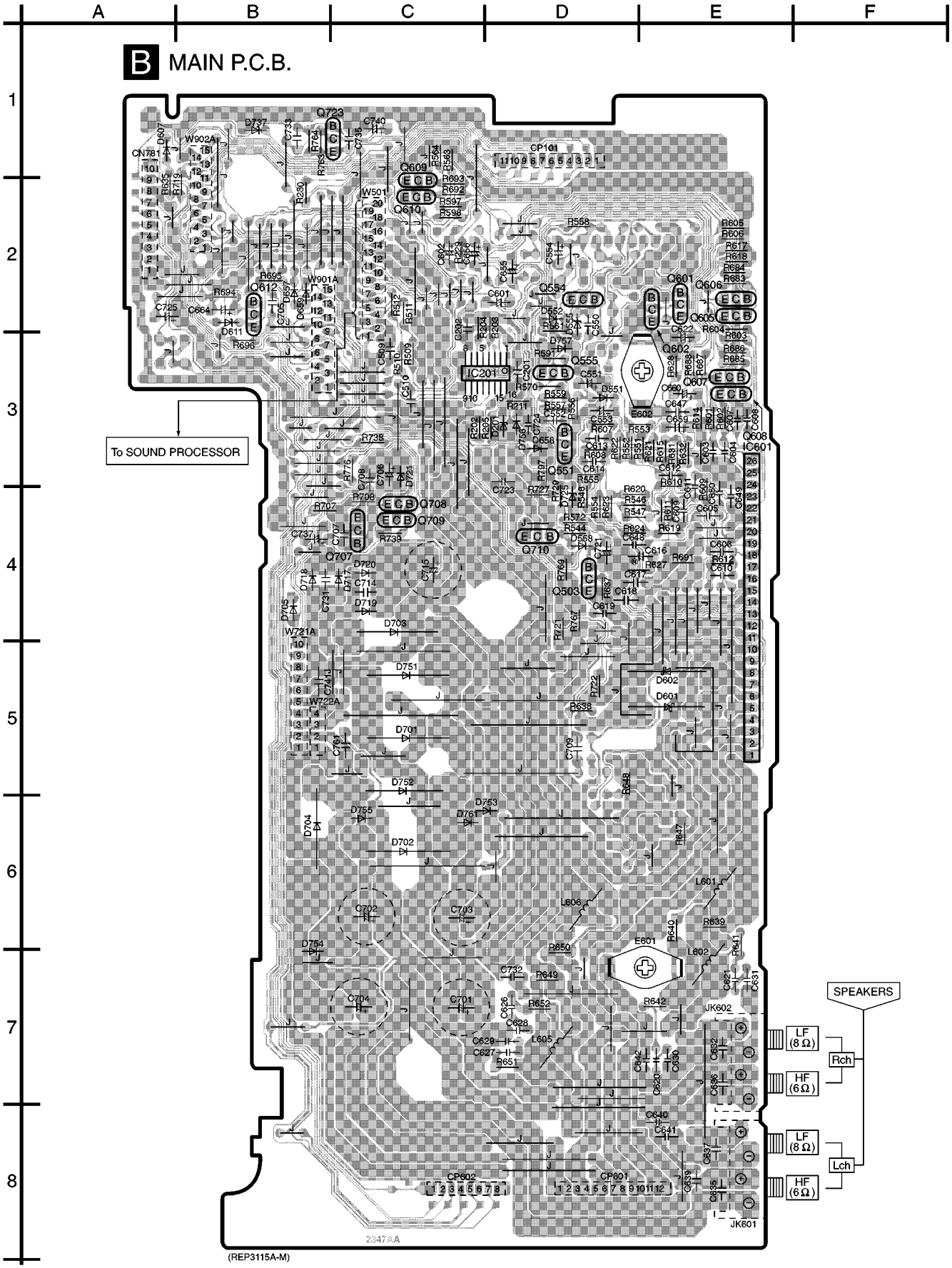
A
B
C
D
E
F
1
2
3
4
5
6
7
8
B MAIN P.C.B.
To SOUND PROCESSOR
SPEAKERS
LF (8 Ω)
HF (6 Ω)
Rch
Lch
(REP3115A-M)

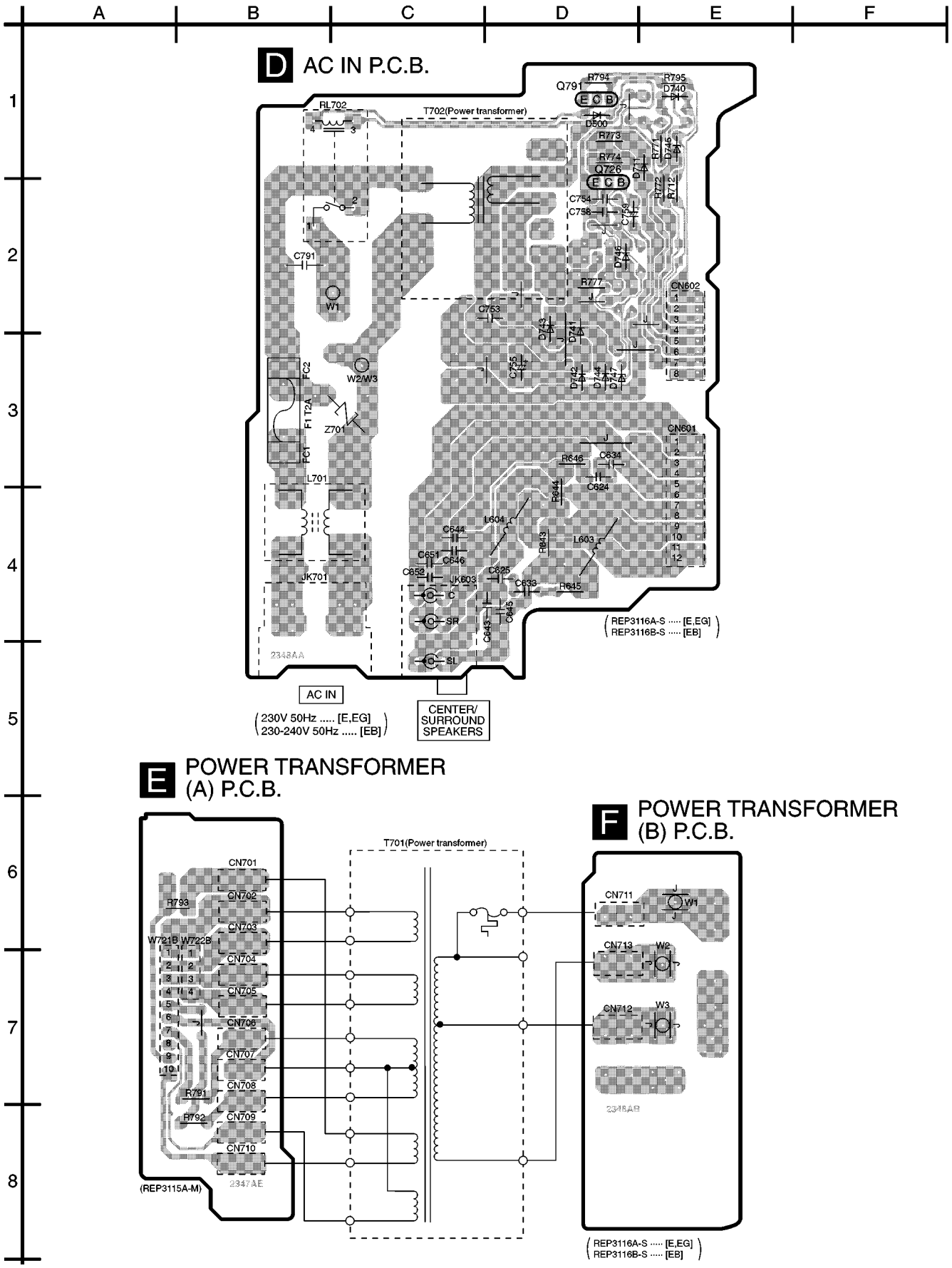
A
B
C
D
E
F
1
2
3
4
5
6
7
8
D AC IN P.C.B.
T702(Power transformer)
RL702
Q791
R794
R795
D740
D500
R773
R774
Q726
D711
R771
D745
R772
R712
C754
C758
C759
D746
C791
W1
R777
CN602
C753
D743
D741
C755
D742
D744
D747
W2/W3
FC2
F1 T2A
Z701
FC1
L701
CN601
R646
C634
C624
R644
L604
C644
R643
L603
C651
C646
C652
JK603
C625
C633
R645
JK701
C
SR
SL
C643
C645
2348AA
REP3116A-S ..... [E,EG]
REP3116B-S ..... [EB]
AC IN
230V 50Hz ..... [E,EG]
230-240V 50Hz ..... [EB]
CENTER/
SURROUND
SPEAKERS
E POWER TRANSFORMER
(A) P.C.B.
F POWER TRANSFORMER
(B) P.C.B.
T701(Power transformer)
CN701
CN702
R793
CN703
W721B W722B
CN704
CN705
CN706
CN707
CN708
R791
R792
CN709
CN710
(REP3115A-M)
2347AE
CN711
W1
CN713
W2
CN712
W3
2348AB
REP3116A-S ..... [E,EG]
REP3116B-S ..... [EB]

12 Type Illustration of ICs, Transistors and Diodes

BU4053BCFE2 C1BB00000527 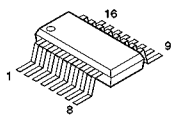	C2BBFD000297 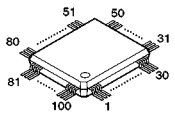	RSN311W64B 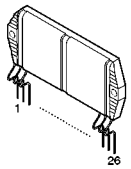	UN411FTA UN4211TA UN4212TA 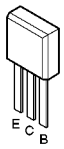	2SB1417PQTA 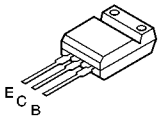	2SD2144STA 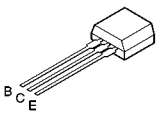
2SA1995RSTA 2SC5398RSTA 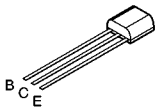	2SC3940AQSTA 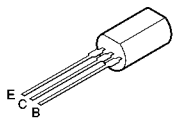	2SB1548PQAU 2SD2374PQAU 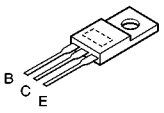	1SS291TA MA700ATA 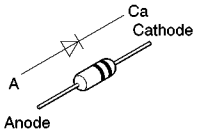	MA4091HTA MA4100MTA MA4150HTA MA4300MTA 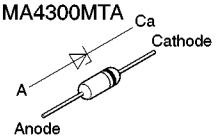	MA165TA 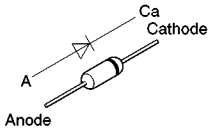
SB360L6508 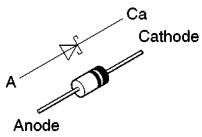	1N5402BM21 RL1N4003N02 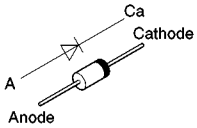	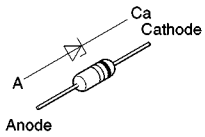	MA4030MTA MA4051MTA MA4056MTA MA4068LTA MA4075MTA MA4082LTA	LNJ301MPUJAD 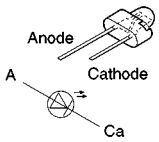	SELS5223C SELS5923C 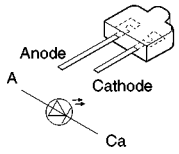

13 Wiring Connection Diagram

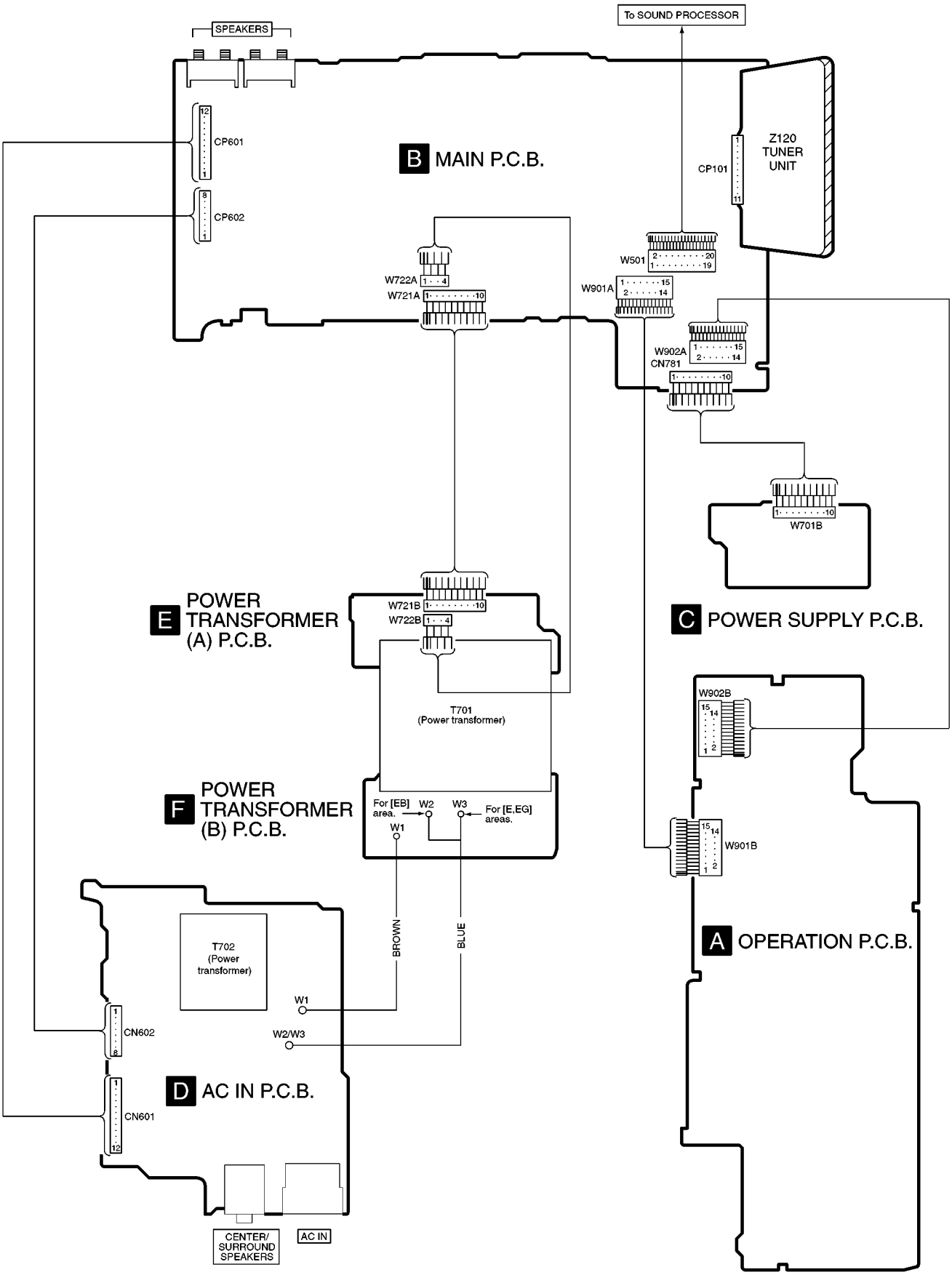

14 Block Diagram

Z120 TUNER UNIT (RAN0005EM-2)

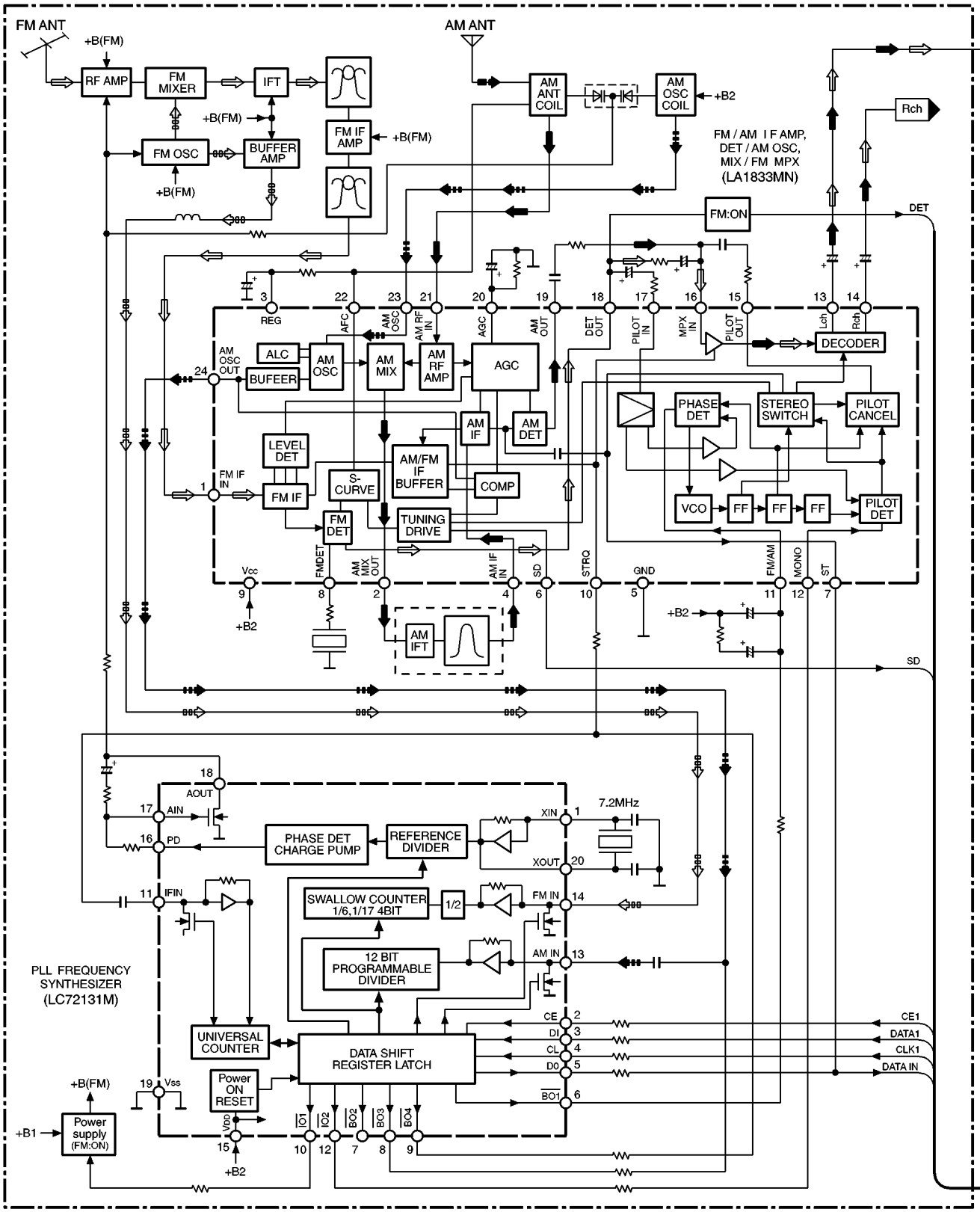

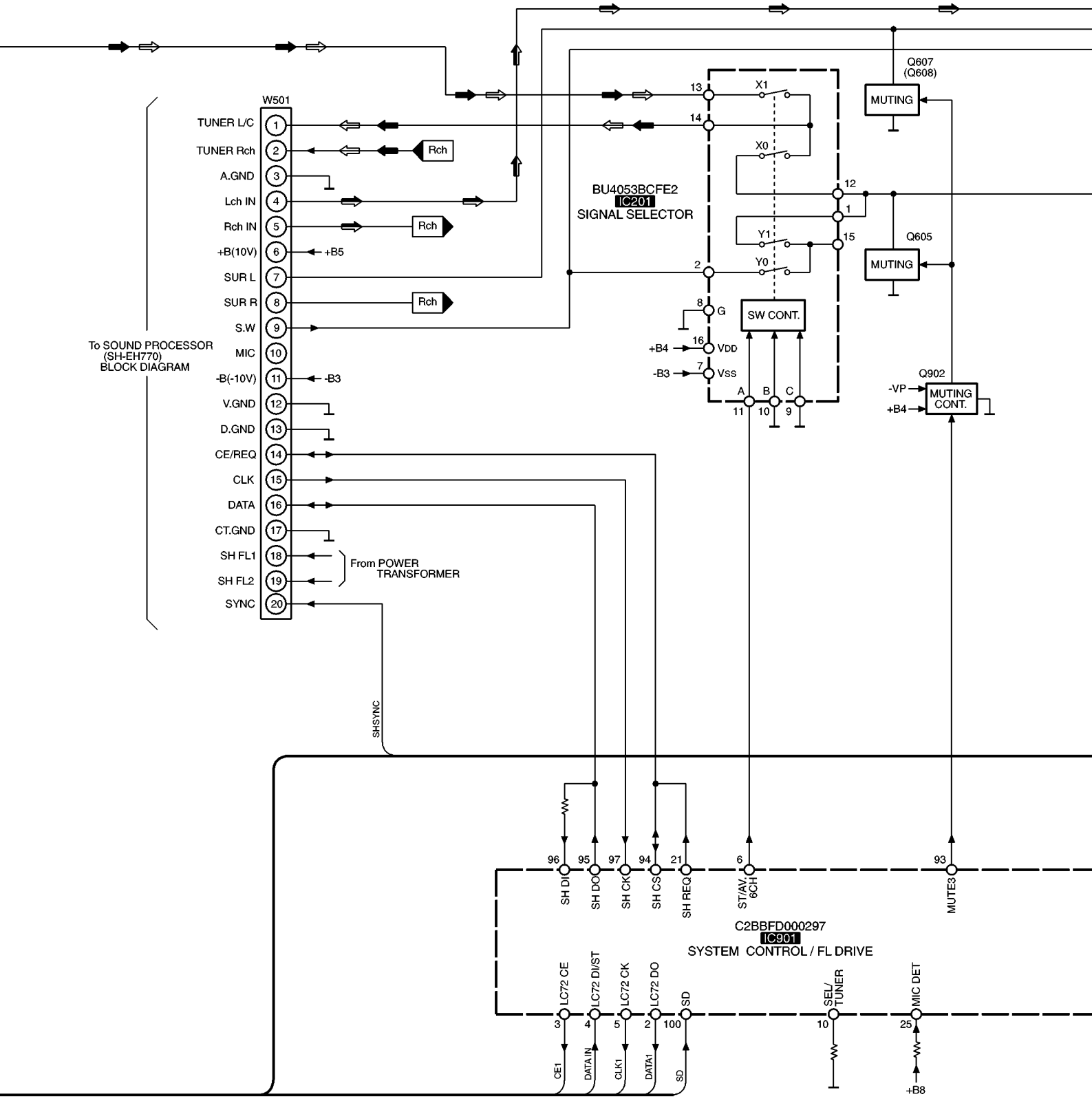
W501
TUNER L/C
TUNER Rch
A.GND
Lch IN
Rch IN
+B(10V)
SUR L
SUR R
S.W
MIC
-B(-10V)
V.GND
D.GND
CE/REQ
CLK
DATA
CT.GND
SH FL1
SH FL2
SYNC
Rch
+B5
-B3
From POWER TRANSFORMER
To SOUND PROCESSOR (SH-EH770) BLOCK DIAGRAM
BU4053BCFE2
IC201
SIGNAL SELECTOR
X1
X0
Y1
Y0
SW CONT.
VDD
VSS
+B4
-B3
Q607 (Q608)
MUTING
Q605
MUTING
Q902
-VP
+B4
MUTING CONT.
SHSYNC
SH DI
SH DO
SH CK
SH CS
SH REQ
ST/AV. 6CH
MUTE3
C2BBFD000297
IC901
SYSTEM CONTROL / FL DRIVE
LC72 CE
LC72 DI/ST
LC72 CK
LC72 DO
SD
SEL/ TUNER
MIC DET
CE1
DATA IN
CLK1
DATA1
SD
+B8

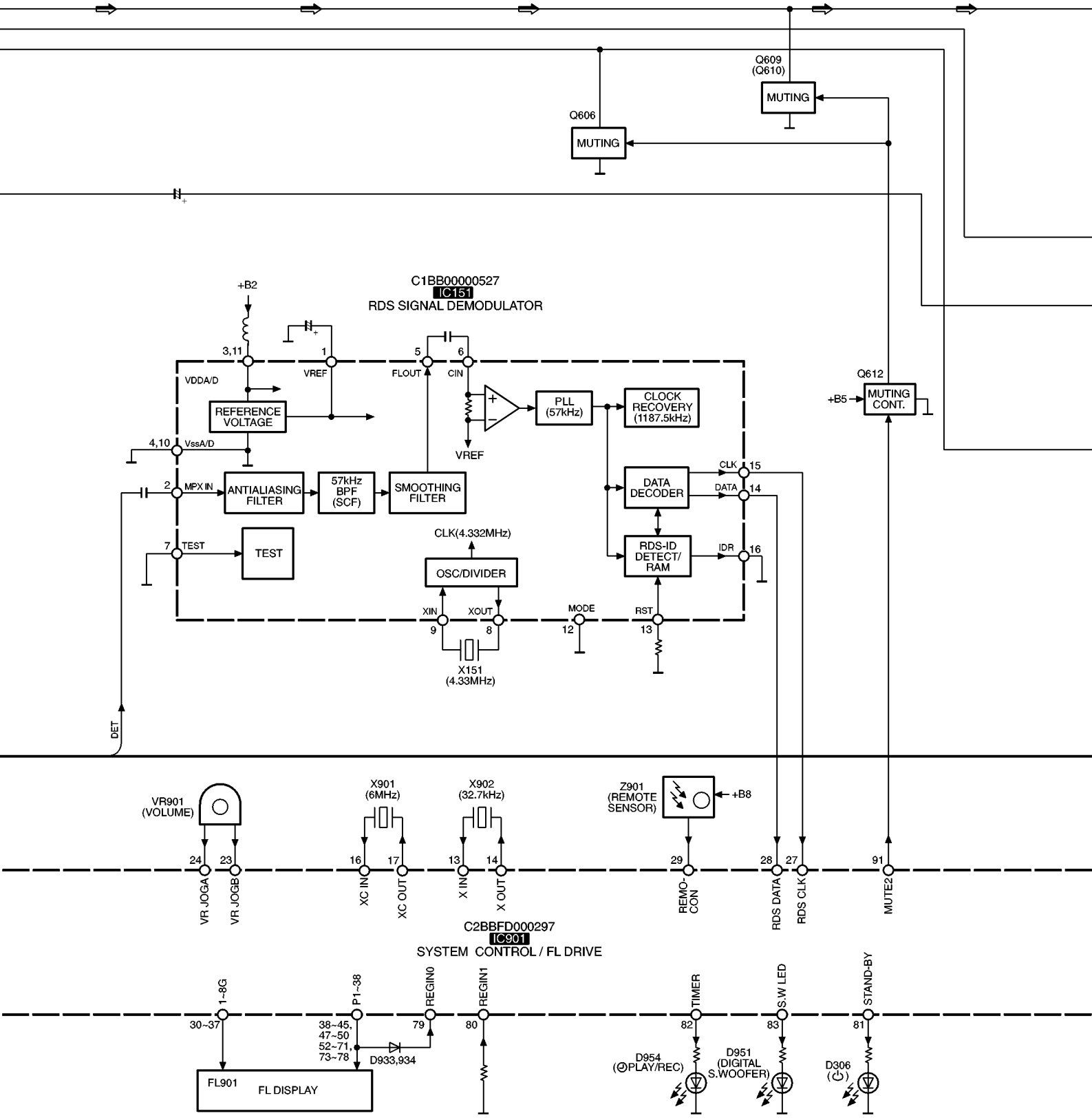
Q609
(Q610)
MUTING
Q606
MUTING
C1BB00000527
IC151
RDS SIGNAL DEMODULATOR
+B2
3,11
1
VREF
5
FLOUT
6
CIN
VDDA/D
REFERENCE VOLTAGE
PLL (57kHz)
CLOCK RECOVERY (1187.5kHz)
VREF
4,10
VssA/D
2
MPX IN
ANTIALIASING FILTER
57kHz BPF (SCF)
SMOOTHING FILTER
DATA DECODER
CLK
15
DATA
14
7
TEST
TEST
CLK(4.332MHz)
RDS-ID DETECT/ RAM
IDR
16
OSC/DIVIDER
XIN
9
XOUT
8
MODE
12
RST
13
X151
(4.33MHz)
Q612
+B5
MUTING CONT.
DET
VR901
(VOLUME)
X901
(6MHz)
X902
(32.7kHz)
Z901
(REMOTE SENSOR)
+B8
24
23
16
17
13
14
29
28
27
91
VR JOGA
VR JOGB
XC IN
XC OUT
X IN
X OUT
REMO-CON
RDS DATA
RDS CLK
MUTE2
C2BBFD000297
IC901
SYSTEM CONTROL / FL DRIVE
1~8G
30~37
P1~38
38~45,
47~50
52~71,
73~78
D933,934
REGIN0
79
REGIN1
80
TIMER
82
S.W LED
83
STAND-BY
81
D954
(PLAY/REC)
D951
(DIGITAL S.WOOFER)
D306
FL901
FL DISPLAY

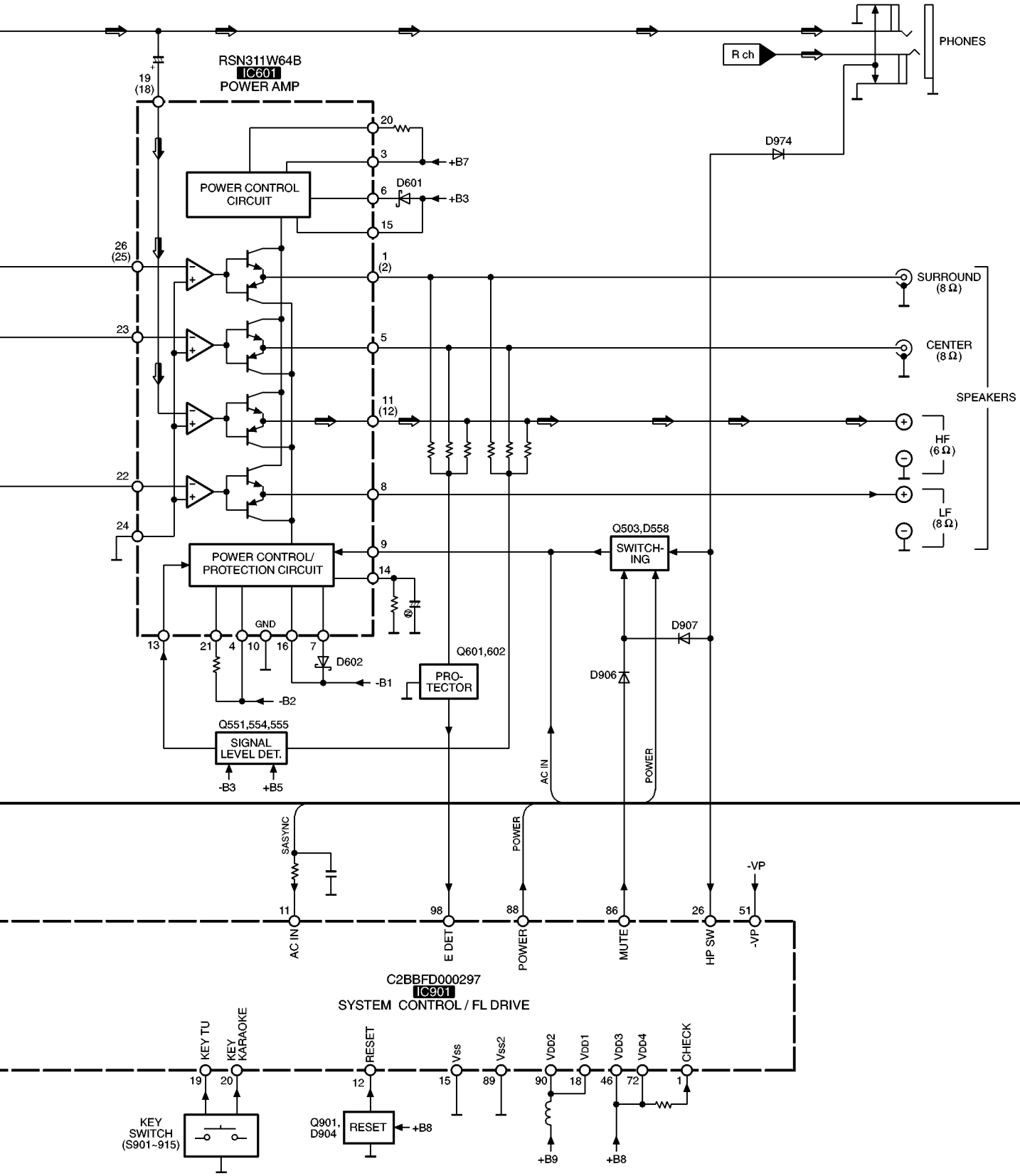
RSN311W64B
IC601
POWER AMP
19
(18)
20
3
+B7
POWER CONTROL
CIRCUIT
6
D601
+B3
15
26
(25)
1
(2)
23
5
11
(12)
22
8
24
9
POWER CONTROL/
PROTECTION CIRCUIT
14
GND
13
21
4
10
16
7
D602
-B1
-B2
Q601,602
PRO-
TECTOR
Q551,554,555
SIGNAL
LEVEL DET.
-B3
+B5
R ch
PHONES
D974
SURROUND
(8 Ω)
CENTER
(8 Ω)
SPEAKERS
HF
(6 Ω)
LF
(8 Ω)
Q503,D558
SWITCH-
ING
D907
D906
AC IN
POWER
SASYNC
POWER
-VP
11
98
88
86
26
51
AC IN
E DET
POWER
MUTE
HP SW
-VP
C2BBFD000297
IC901
SYSTEM CONTROL / FL DRIVE
KEY TU
KEY
KARAOKE
RESET
Vss
Vss2
VDD2
VDD1
VDD3
VDD4
CHECK
19
20
12
15
89
90
18
46
72
1
KEY
SWITCH
(S901~915)
Q901,
D904
RESET
+B8
+B9
+B8

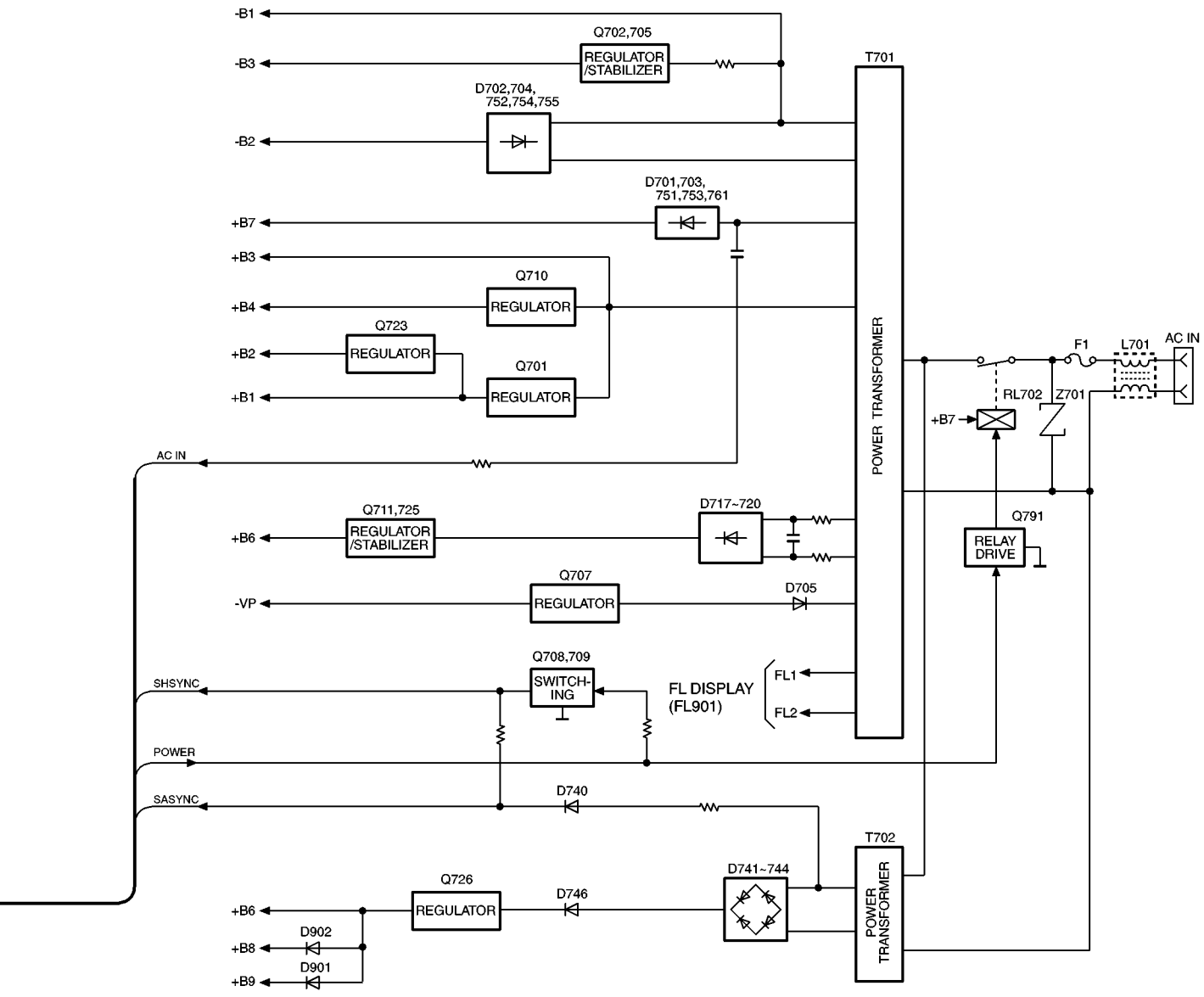

NOTES : • SIGNAL LINE
: FM SIGNAL
: AM SIGNAL
: FM OSC SIGNAL
: AM OSC SIGNAL
: AUDIO SIGNAL
• ( ) indicates pin No. Right channel.

15 Terminal Function of ICs

15.1. IC901 (C2BBFD000297): System Control/FL Drive

Pin No.	Terminal Name	I/O	Function
1	CHECK	I	Clock check signal input
2	LC72 DI	O	PLL data signal output for tuner unit (Z120)
3	LC72 CE	O	Chip enable signal output for tuner unit (Z120)
4	LC72 DI/ST	I	IF count data/stereo detect signal input from tuner unit (Z120)
5	LC72 CK	O	Clock signal output for tuner unit (Z120)
6	ST/AV. 6CH	O	Signal select output
7	NC	-	Not used, open
8			
9	SEL TUNER	-	Not used, open
10	SEL/ TUNER	-	Not used, connected to GND
11	AC IN	I	Power failure detect signal input
12	RESET	I	Reset signal input
13	X IN	I	Oscillator connected terminal (32.7 kHz)
14	X OUT	O	
15	V_{SS}	-	GND terminal
16	XC IN	I	Oscillator connected terminal (6 MHz)
17	XC OUT	O	
18	$V_{DD}1$	I	Power supply terminal
19	KEY TU	I	Operation key signal input
20	KEY KARAOKE	I	Operation key signal input
21	SH REQ	I	Request signal input from Sound Processor
22	NC(GND)	-	Not used, connected to GND
23	VR JOGB	I	Volume control signal input
24	VR JOGA		
25	MIC DET	I	Microphone connecting detect signal input (Not used, connected to V_{DD})
26	HP SW	I	Headphone connecting detect signal input
27	RDS CLK	I	RDS clock signal input
28	RDS DATA	I	RDS data signal input
29	REMO CON	I	Remote control signal input
30 | 37	8G | 1G	O	Grid signal output
38 | 45	P1 | P8	O	Segment signal output
46	$V_{DD}3$	I	Power supply terminal
47 | 50	P9 | P12	O	Segment signal output
51	-VP	I	Power supply terminal (Negative)
52 | 71	P13 | P32	O	Segment signal output
72	$V_{DD}4$	I	Power supply terminal
73 | 78	P33 | P38	O	Segment signal output
79	REGIN0	-	Not used, connected to GND
80	REGIN1		
81	STANDBY	O	LED (STANDBY) drive signal output
82	TIMER	O	LED (TIMER) drive signal output
83	S.W.LED	O	LED (DIGITAL S.WOOFER) drive signal output
84	LOUNGE	-	LED (LOUNGE) drive signal output (Not used, connected to GND)
85	CHORUS	-	LED (CHORUS) drive signal output (Not used, connected to V_{DD})
86	MUTE	O	Muting signal output
87	NC	-	Not used, open
88	POWER	O	Power control signal output
89	$V_{SS}2$	-	GND terminal
90	$V_{DD}2$	I	Power supply terminal
91	MUTE2	O	Muting signal output
92	NC	-	Not used, open
93	MUTE3	O	Muting signal output
94	SH CS	O	Chip select signal output for Sound Processor
95	SH DO	O	Serial communication signal to Sound Processor (Data signal output)
96	SH DI	I	Serial communication signal to Sound Processor (Data signal input)
97	SH CK	I	Serial communication signal to Sound Processor (Clock signal input)
98	E DET	I	Unusual condition detect signal input
99	CR TIMER	-	Not used, open
100	SD	I	Station detector signal input from tuner unit (Z120)

16 Replacement Parts List

Notes:

- Important safety notice:

  Components identified by ⚠ mark have special characteristics important for safety.

  Furthermore, special parts which have purposes of fire-retardant (resistors), high-quality sound (capacitors), low-noise (resistors), etc. are used.

  When replacing any of components, be sure to use only manufacture's specified parts shown in the parts list.

- The <IA> <IB> <IC> <ID> <IE> marks in Remarks indicate language of instruction manual.

  <IA>: Spanish

  <IB>: English

  <IC>: German, Italian, French

  <ID>: Netherlands, Danish, Swedish

  <ID>: Russian, Polish, Czech

- The parenthesized indications in the Remarks columns specify the areas. (Refer to the cover page for area.)
- The marking [RTL] indicates that Retention Time is Limited for this item. After the discontinuation of this assembly in production, the item will continue to be available for a specific period of time. The retention period of availability is dependent on the type of assembly, and in accordance with the laws governing part and product retention. After the end of this period, the assembly will no longer be available.
- All parts are supplied by MESA.

Ref. No.	Part No.	Part Name & Description	Pcs	Remarks
1	RKM0395F-S	CABINET	1	
2	RHD30007-1S	SCREW	4	
3	XTBS3+10JFZ1	SCREW	1	
4	REX0967	WIRE ASS´Y	1	
5	RMQ1018	GASKET	1	
6	RGW0317-S	KNOB,VOLUME	1	
7	RHN90001	NUT	1	
8	RKA0106-N	FOOT RING	4	
9	RKF0606K-K	BACK GRILL	1	
10	RKW0581-1V	FL WINDOW	1	
11	RMN0427A	CABLE HOLDER	1	
12	RYP1005-S	FRONT PANEL ASS´Y	1	
12-1	RGB0025-A	TECHNICS BADGE	1	
13	SHG1654	RUBBER	4	
14	XTB3+10JFZ	SCREW	11	
15	XTB3+8JFZ	SCREW	13	
16	XTW3+15T	SCREW	2	
17	XTBS3+8JFZ1	SCREW	2	
18	RLBT4001-N	FERRITE CORE	1	
19	RMN0582	HOLDER	1	
20	XTB3+12FFZ	SCREW	1	
21	XTB3+20JFZ	SCREW	1	
A1	EUR7702050	REMOTE CONTROLLER	1	
A1-1	UR64EC2337E	BATTERY COVER	1	
A2	REE0853	SP CORD(GRAY/BLUE)	2	
A3	REE1057	SP CORD(RED/BLACK)	2	
A4	SJP9009	ANT ADAPTOR	1	(EB)
A5	RJA0019-1X	AC POWER SUPPLY CORD	1	(E,EG,EP) ⚠
A5	RJA0053-2X	AC POWER SUPPLY CORD	1	(EB) ⚠
A6	RQCA0801	DEMO GUIDE	1	
A7	RQCB0169	SERVICE CENTER LIST	1	
A8	RQT5756-E	OPERATING INSTRUCTIONS	1	(E)<IA>
A8	RQT5753-B	OPERATING INSTRUCTIONS	1	(EB,EP)<IB>
A8	RQT5751-D	OPERATING INSTRUCTIONS	1	(EG)<IC>
A8	RQT5752-H	OPERATING INSTRUCTIONS	1	(EG)<ID>
A8	RQT5757-R	OPERATING INSTRUCTIONS	1	(EP)<IE>
A9	RSA0007	FM INDOOR ANTENNA	1	
A10	RSA0022-L	AM LOOP ANTENNA	1	
C151	ECA1CAK100XB	16V 10U	1	
C152	ECBT1H331KB5	50V 330P	1	F1D1H331A012
C153	ECBT1H102KB5	50V 1000P	1	F1D1H102A012
C154	ECBT1H561KB5	50V 560P	1	F1D1H561A012
C155	ECBT1H102KB5	50V 1000P	1	F1D1H102A012
C156,57	ECBT1H470J5	50V 47P	2	F1D1H470A006
C158,59	RCE0JKA470BG	6.3V 47U	2	F2A0J470A014
C160	ECBT1H102KB5	50V 1000P	1	F1D1H102A012
C201,02	ECBT1H104KB5	50V 0.1U	2	
C395,96	ECBT1H473KB5	50V 0.047U	2	
C509,10	ECBT1H103KB5	50V 0.01U	2	
C550	ECBT1H103KB5	50V 0.01U	1	
C551	ECA1HAK2R2XB	50V 2.2U	1	
C552	ECBT1H103KB5	50V 0.01U	1	
C553	RCE1HKAR47BG	50V 0.47U	1	F2A1HR47A015
C554	ECA1AAK221XH	10V 220U	1	
C601,02	ECA1CAK100XB	16V 10U	2	
C603,04	ECBT1H471KB5	50V 470P	2	F1D1H471A012
C605,06	ECBT1H102KB5	50V 1000P	2	F1D1H102A012
C607,08	ECBT1H471KB5	50V 470P	2	F1D1H471A012
C609,10	ECBT1H560J5	50V 56P	2	ECBT1H560J3
C611,12	ECBT1H150JC5	50V 15P	2	
C613,14	ECBT1H470J5	50V 47P	2	F1D1H470A006
C616	ECEA1HKNR47B	50V 0.47U	1	
C617,18	ECKR2H103ZU	500V 0.01U	2	
C619-21	ECBT1H104KB5	50V 0.1U	3	
C622	RCE1AKA101BG	10V 100U	1	F2A1A1010020
C624-31	ECBT1H104KB5	50V 0.1U	8	
C632	ECBT1H473KB5	50V 0.047U	1	
C633,34	ECBT1H104KB5	50V 0.1U	2	
C635-37	ECBT1H473KB5	50V 0.047U	3	
C639-44	ECBT1H102KB5	50V 1000P	6	F1D1H102A012
C645,46	ECBT1H473KB5	50V 0.047U	2	
C647-50	ECBT1H102KB5	50V 1000P	4	F1D1H102A012
C651	ECBT1H473KB5	50V 0.047U	1	
C652	ECBT1H102KB5	50V 1000P	1	F1D1H102A012
C655,56	ECA1CAK100XB	16V 10U	2	
C659,60	ECA1CAK100XB	16V 10U	2	
C664	ECEA1CKS100	16V 10U	1	
C701-04	F2B1V4720004	4700U	4	⚠
C705	ECBT1H103KB5	50V 0.01U	1	
C706	RCE1VKA100BG	35V 10U	1	F2A1V1000011
C707,08	ECBT1H473KB5	50V 0.047U	2	
C709	ECQV1H104JM3	50V 0.1U	1	
C710	ECBT1H473KB5	50V 0.047U	1	
C714	ECBT1H102KB5	50V 1000P	1	F1D1H102A012
C715	ECA1EAM472XE	470U	1	⚠
C717	ECA1CAK330XB	16V 33U	1	
C718	ECA1CAK101XB	16V 100U	1	
C719,20	ECBT1H473KB5	50V 0.047U	2	
C721	RCE1AKA101BG	10V 100U	1	F2A1A1010020
C722	ECA1CAK101XB	16V 100U	1	
C723,24	ECBT1H473KB5	50V 0.047U	2	
C725	ECA1CAK470XB	16V 47U	1	
C731	ECBT1H102KB5	50V 1000P	1	F1D1H102A012
C732	ECBT1H223KB5	50V 0.022U	1	F1D1H223A012
C733	ECBT1H473KB5	50V 0.047U	1	

Ref. No.	Part No.	Part Name & Description	Pcs	Remarks
C734	RCE1HKA3R3BG	50V 3.3U	1	F2A1H3R3A015
C735	ECBT1H473KB5	50V 0.047U	1	
C737	ECA1HM101	100U	1	⚠
C740	ECA1CAK100XB	16V 10U	1	
C741	ECQE1104KF3	100V 0.1U	1	
C753	ECKR1H103ZF5	50V 0.01U	1	F1B1H1030001
C754	ECBT1H103KB5	50V 0.01U	1	
C755	ECA1CAM102XB	1000U	1	⚠
C758	ECBT1H103KB5	50V 0.01U	1	
C759	RCE1AKA470BG	10V 47U	1	F2A1A470A011
C761	ECQE1104KF3	100V 0.1U	1	
C791	ECKWRS102MBC	1000P	1	⚠
C901	EEAFC0J101B	6.3V 100U	1	
C902	RCE1AM102BV	10V 1000U	1	
C903,04	ECBT1H103KB5	50V 0.01U	2	
C905	ECBT1H102KB5	50V 1000P	1	F1D1H102A012
C907,08	ECBT1H471KB5	50V 470P	2	F1D1H471A012
C909	ECBT1H102KB5	50V 1000P	1	F1D1H102A012
C910	ECBT1H200JC5	50V 20P	1	F1D1H200A015
C911	ECBT1H180J5	50V 18P	1	F1D1H180A006
C912	ECBT1H104KB5	50V 0.1U	1	
C914	ECA1HAK2R2XB	50V 2.2U	1	
C915	ECBT1H103KB5	50V 0.01U	1	
C916	EEAFC0J101B	6.3V 100U	1	
C917	ECBT1H103KB5	50V 0.01U	1	
C918	ECA0JAK101XB	6.3V 100U	1	
C919,20	RCE1HKA4R7BG	50V 4.7U	2	F2A1H4R70009
C921	ECBT1H102KB5	50V 1000P	1	F1D1H102A012
C922	ECA1VAK330XB	35V 33U	1	
C923,24	ECBT1H104KB5	50V 0.1U	2	
C925,26	ECBT1H102KB5	50V 1000P	2	F1D1H102A012
C927,28	RCE1HKA4R7BG	50V 4.7U	2	F2A1H4R70009
C931	ECEA1CKN100B	16V 10U	1	
CN601	RJU057W012	CONNECTOR(12P)	1	K1KB12B00033
CN602	RJU057W008	CONNECTOR(8P)	1	K1KB08B00034
CN701-13	RJS1A1101T1	CONNECTOR(1P)	13	
CN781	RJS10T5ZA	CONNECTOR(10P)	1	K1MP10A00007
CP101	RJT100W11	CONNECTOR(11P)	1	
CP601	RJT057W012-1	CONNECTOR(12P)	1	K1KA12A00160
CP602	RJT057W008-1	CONNECTOR(8P)	1	K1KA08A00187
D151	MA4051M	DIODE	1	MAZ40510M
D201	MA4056M	DIODE	1	MAZ40560M
D306	SELS5223C	LED	1	B3AAA0000486
D500	MA165	DIODE	1	MA2C165
D551,52	MA165	DIODE	2	MA2C165
D555	MA4100M	DIODE	1	MAZ41000M
D558	MA165	DIODE	1	MA2C165
D601,02	SB360L6508	DIODE	2	B0JAPG000014
D607	1SS291TA	DIODE	1	
D611	MA4051M	DIODE	1	MAZ40510M
D657-59	MA165	DIODE	3	MA2C165
D701-04	1N5402BF	DIODE	4	⚠
D705	RL1N4003N02	DIODE	1	⚠
D711	RL1N4003N02	DIODE	1	
D717-20	RL1N4003N02	DIODE	4	
D721	MA4300M	DIODE	1	MAZ43000M ⚠
D723	MA4150M	DIODE	1	MAZ41500M ⚠
D725	MA4082LTA	DIODE	1	MAZ40820LF ⚠
D730	MA4091H	DIODE	1	MAZ40910HF ⚠
D737	MA4082LTA	DIODE	1	MAZ40820LF ⚠
D738-40	MA165	DIODE	3	MA2C165
D741-44	RL1N4003N02	DIODE	4	⚠
D745	MA4051M	DIODE	1	MAZ40510M
D746	RL1N4003N02	DIODE	1	⚠
D747	MA4068L	DIODE	1	MAZ40680L ⚠

Ref. No.	Part No.	Part Name & Description	Pcs	Remarks
D751,52	1N5402BF	DIODE	2	⚠
D753-55	RL1N4003N02	DIODE	3	⚠
D756,57	MA700	DIODE	2	MA2C700
D758	MA165	DIODE	1	MA2C165
D761	RL1N4003N02	DIODE	1	⚠
D901,02	1SS291TA	DIODE	2	
D904	MA165	DIODE	1	MA2C165
D905	1SS291TA	DIODE	1	
D906,07	MA165	DIODE	2	MA2C165
D933,34	MA165	DIODE	2	MA2C165
D951	LNJ301MPUJAD	LED	1	
D954	SELS5923C	LED	1	B3ADA0000083
D961	MA4075M	DIODE	1	MAZ40750M
D973	MA4030M	DIODE	1	MAZ40300M
D974	MA165	DIODE	1	MA2C165
F1	XBA2C20TB0	FUSE,T2A	1	K5D202BL0001 ⚠
FL901	A2BB00000084	FL DISPLAY	1	
IC151	C1BB00000527	IC	1	
IC201	BU4053BCFE2	IC	1	
IC601	RSN311W64B	IC	1	
IC901	C2BBFD000297	IC	1	
JK601,02	K4BC04B00028	JACK,SPEAKERS	2	
JK603	K2HA103B0015	JACK,SPEAKERS	1	
JK701	SJS9236-1	JACK,AC INLET	1	K2AA2B000002 ⚠
JK903	RJJ37TN02-C	JACK,HEADPHONES	1	K2HC103A0009
L151,52	ELEXT101KA9	COIL	2	
L153	RLQA1R0JT1-Y	COIL	1	G0C1R0JA0019
L601-06	RLQYR73MW1-0	COIL	6	G0ZZ00001606
L701	RLQZ371	LINE FILTER	1	ELF15N035AN ⚠
L901	RLQA100JT1-Y	COIL	1	G0C100JA0019
L902	RLQA1R0JT1-Y	COIL	1	G0C1R0JA0019
P1	RPG5267	PACKING CASE (SYSTEM)	1	(E)
P1	RPG5266	PACKING CASE (SYSTEM)	1	(EB)
P1	RPG5265	PACKING CASE (SYSTEM)	1	(EG)
P1	RPG5268	PACKING CASE (SYSTEM)	1	(EP)
P2	RPQ0951	PAD(SYSTEM)	1	
P3	RPG4397	PACKING CASE(RS)	1	
P3	RPG4396	PACKING CASE(SA)	1	
P3	RPG4398	PACKING CASE(SH)	1	
P3	RPG4399	PACKING CASE(SL)	1	
P4	RPN1195-2	PAD(RS)	1	
P4	RPN1194	PAD(SA)	1	
P4	RPN1196	PAD(SH)	1	
P4	RPN1197	PAD(SL)	1	
P5	RPF0139-1	PROTECTION BAG (F.B.)	1	
P6	SPP740-1	SHEET	4	
PCB1	REP3115A-M	MAIN PCB	1	[RTL]
PCB2	REP3116A-S	SUB PCB	1	(E,EG,EP) [RTL]
PCB2	REP3116B-S	SUB PCB	1	(EB) [RTL]
Q503	2SC5398RSTA	TRANSISTOR	1	B1AACF000059
Q551	2SA1995RSTA	TRANSISTOR	1	B1ACDF000006
Q554	2SA1995RSTA	TRANSISTOR	1	B1ACDF000006
Q555	2SC3327A	TRANSISTOR	1	
Q601,02	2SC5398RSTA	TRANSISTOR	2	B1AACF000059
Q605-10	2SC3327A	TRANSISTOR	6	
Q612	UN411FTA	TRANSISTOR	1	UNR411F00A
Q701	2SD2374PQAU	TRANSISTOR	1	2SD23740J1AU ⚠

Ref. No.	Part No.	Part Name & Description	Pcs	Remarks
Q702	2SB1548PQAU	TRANSISTOR	1	2SB15480J1AU ⚠
Q705	2SA1995RSTA	TRANSISTOR	1	B1ACDF000006
Q707	2SB1417PQTA	TRANSISTOR	1	2SB14170JA ⚠
Q708	UN4211	TRANSISTOR	1	UNR4211
Q709	2SC3327A	TRANSISTOR	1	
Q710	2SC3940AQSTA	TRANSISTOR	1	2SC3940ARA ⚠
Q711	2SB1548PQAU	TRANSISTOR	1	2SB15480J1AU ⚠
Q723	2SC3940AQSTA	TRANSISTOR	1	2SC3940ARA ⚠
Q725	2SC5398RSTA	TRANSISTOR	1	B1AACF000059
Q726	2SC3940AQSTA	TRANSISTOR	1	2SC3940ARA ⚠
Q791	2SC3327A	TRANSISTOR	1	
Q901	UN4212TA	TRANSISTOR	1	UNR421200A
Q902	UN411FTA	TRANSISTOR	1	UNR411F00A
R151,52	ERDS2FJ102	1/4W 1K	2	
R153,54	ERDS2FJ104	1/4W 100K	2	
R155	ERDS2FJ121	1/4W 120	1	
R157,58	ERDS2FJ102	1/4W 1K	2	
R202-05	ERDS2FJ104	1/4W 100K	4	
R211	ERDS2FJ271	1/4W 270	1	
R229,30	ERDS2FJ102	1/4W 1K	2	
R509-12	ERDS2FJ470	1/4W 47	4	
R544	ERDS2FJ103	1/4W 10K	1	
R546,47	ERDS2FJ183	1/4W 18K	2	
R548	ERDS2FJ102	1/4W 1K	1	
R551	ERDS2FJ183	1/4W 18K	1	
R552	ERDS2FJ473	1/4W 47K	1	
R553,54	ERDS2FJ562	1/4W 5.6K	2	
R555	ERDS2FJ223	1/4W 22K	1	
R556	ERDS2FJ104	1/4W 100K	1	
R557	ERDS2FJ103	1/4W 10K	1	
R558	ERDS2FJ102	1/4W 1K	1	
R559	ERDS2FJ472	1/4W 4.7K	1	
R561	ERDS2FJ104	1/4W 100K	1	
R563,64	ERDS2FJ272	1/4W 2.7K	2	
R570	ERDS2TJ225	1/4W 2.2M	1	ERDS2TJ225T
R572	ERDS2FJ153	1/4W 15K	1	
R591	ERDS2FJ472	1/4W 4.7K	1	
R597,98	ERDS2FJ222	1/4W 2.2K	2	
R601-04	ERDS2FJ332	1/4W 3.3K	4	
R605,06	ERDS2FJ472	1/4W 4.7K	2	
R607,08	ERDS2FJ563	1/4W 56K	2	
R609,10	ERDS2FJ154	1/4W 150K	2	
R611,12	ERDS2FJ563	1/4W 56K	2	
R614,15	ERDS2FJ472	1/4W 4.7K	2	
R617,18	ERDS2FJ472	1/4W 4.7K	2	
R619,20	ERDS2FJ124	1/4W 120K	2	
R621	ERDS2FJ154	1/4W 150K	1	
R622,23	ERDS2FJ124	1/4W 120K	2	
R624	ERDS2FJ154	1/4W 150K	1	
R627	ERDS2FJ474	1/4W 470K	1	
R628	ERDS2FJ223	1/4W 22K	1	
R631,32	ERDS2FJ392	1/4W 3.9K	2	
R635	ERDS2FJ222	1/4W 2.2K	1	
R637	ERDS2FJ153	1/4W 15K	1	
R638	ERDS2FJ683	1/4W 68K	1	
R639,40	ERDS1FJ100	10	2	⚠
R641,42	ERDS2FJ100	1/4W 10	2	
R643,44	ERDS1FJ100	10	2	⚠
R645,46	ERDS2FJ100	1/4W 10	2	
R647	ERDS2FJ271	270	1	⚠
R648	ERD2FCG121	120	1	⚠
R649-52	ERDS1FJ100	10	4	⚠
R683-86	ERDS2FJ102	1/4W 1K	4	
R687,88	ERDS2FJ152	1/4W 1.5K	2	
R691	ERDS1FJ680	68	1	⚠
R692,93	ERDS2FJ102	1/4W 1K	2	
R694	ERDS2FJ223	1/4W 22K	1	

Ref. No.	Part No.	Part Name & Description	Pcs	Remarks
R695	ERDS2FJ471	1/4W 470	1	
R696	ERDS2FJ473	1/4W 47K	1	
R707	ERD2FCJ4R7	4.7	1	⚠
R708	ERDS2FJ472	1/4W 4.7K	1	
R712	ERDS2FJ222	1/4W 2.2K	1	
R719	ERDS2FJ332	1/4W 3.3K	1	
R720	ERDS2FJ392	1/4W 3.9K	1	
R721	ERD2FCJ4R7	4.7	1	⚠
R722	ERQ16NKW2R2E	2.2	1	⚠
R723	ERDS2FJ562	1/4W 5.6K	1	
R724	ERDS2FJ392	1/4W 3.9K	1	
R725	ERDS2FJ100	1/4W 10	1	
R727	ERDS2FJ392	1/4W 3.9K	1	
R729	ERDS2FJ221	1/4W 220	1	
R738	ERDS2FJ392	1/4W 3.9K	1	
R739	ERDS2FJ473	1/4W 47K	1	
R749	ERDS2FJ102	1/4W 1K	1	
R763	ERDS2FJ472	1/4W 4.7K	1	
R764	ERDS2FJ331	1/4W 330	1	
R765	ERDS1FJ221	220	1	⚠
R767	ERD2FCJ4R7	4.7	1	⚠
R768	ERDS2FJ101	1/4W 100	1	
R769	ERD25V0R00T	1/4W 0	1	
R771	ERDS2FJ222	1/4W 2.2K	1	
R772	ERDS2FJ223	1/4W 22K	1	
R773,74	ERDS1FJ180	18	2	ERDS1FVJ180T ⚠
R776	ERDS2FJ103	1/4W 10K	1	
R777	ERDS2FJ102	1/4W 1K	1	
R791,92	RSFMB40KT-L	FUSE PROTECTOR	2	K5G402A00010 ⚠
R793	ERDS2FJ1R0	1/4W 1	1	
R794	ERDS2FJ473	1/4W 47K	1	
R795	ERDS2FJ392	1/4W 3.9K	1	
R797	ERDS2T0T	1/4W 0	1	
R901	ERDS2FJ821	1/4W 820	1	
R902	ERDS2FJ102	1/4W 1K	1	
R903	ERDS2FJ122	1/4W 1.2K	1	
R904	ERDS2FJ152	1/4W 1.5K	1	
R905	ERDS2FJ182	1/4W 1.8K	1	
R906	ERDS2FJ222	1/4W 2.2K	1	
R907	ERDS2FJ332	1/4W 3.3K	1	
R908	ERDS2FJ472	1/4W 4.7K	1	
R909	ERDS2FJ182	1/4W 1.8K	1	
R910	ERDS2FJ222	1/4W 2.2K	1	
R911	ERDS2FJ332	1/4W 3.3K	1	
R912	ERDS2FJ472	1/4W 4.7K	1	
R913	ERDS2FJ821	1/4W 820	1	
R914	ERDS2FJ102	1/4W 1K	1	
R915	ERDS2FJ122	1/4W 1.2K	1	
R916	ERDS2FJ152	1/4W 1.5K	1	
R918	ERDS2FJ103	1/4W 10K	1	
R919	ERDS2FJ153	1/4W 15K	1	
R921,22	ERDS2FJ103	1/4W 10K	2	
R924,25	ERDS2FJ102	1/4W 1K	2	
R926	ERDS2FJ222	1/4W 2.2K	1	
R928	ERDS2FJ473	1/4W 47K	1	
R929-32	ERDS2FJ102	1/4W 1K	4	
R934-36	ERDS2FJ101	1/4W 100	3	
R937	ERDS2FJ103	1/4W 10K	1	
R939	ERDS2FJ152	1/4W 1.5K	1	
R940,41	ERDS2FJ102	1/4W 1K	2	
R942	ERDS2FJ222	1/4W 2.2K	1	
R943	ERDS2FJ101	1/4W 100	1	
R944	ERDS2FJ222	1/4W 2.2K	1	
R945	ERDS2FJ101	1/4W 100	1	
R946	ERDS2FJ102	1/4W 1K	1	
R949	ERDS2FJ472	1/4W 4.7K	1	
R950	ERDS2FJ101	1/4W 100	1	
R951	ERDS2FJ334	1/4W 330K	1	
R952	ERDS2TJ106T	1/4W 10M	1	
R953	ERDS2FJ101	1/4W 100	1	
R954	ERDS2FJ104	1/4W 100K	1	

Ref. No.	Part No.	Part Name & Description	Pcs	Remarks
R956-58	ERDS2FJ102	1/4W 1K	3	
R959	ERDS2FJ470	1/4W 47	1	
R960	ERDS2FJ152	1/4W 1.5K	1	
R961,62	ERDS2FJ223	1/4W 22K	2	
R965,66	ERDS2FJ392	1/4W 3.9K	2	
R969	ERDS2FJ272	1/4W 2.7K	1	
R974	ERDS2FJ102	1/4W 1K	1	
R975	ERDS2FJ223	1/4W 22K	1	
R976	ERDS2FJ104	1/4W 100K	1	
R986	ERDS2FJ152	1/4W 1.5K	1	
R987,88	ERDS2FJ102	1/4W 1K	2	
R990	ERDS2FJ104	1/4W 100K	1	
R991	ERDS2FJ473	1/4W 47K	1	
R993,94	ERDS2FJ104	1/4W 100K	2	
R995	ERDS2FJ221	1/4W 220	1	
R996,97	ERDS2FJ151	1/4W 150	2	
R999	ERDS2FJ104	1/4W 100K	1	
RL702	RSY0040M-0	RELAY	1	⚠
S901-15	EVQ11G05R	SW	15	
T701	RTP2N5B012	POWER TRANSFORMER	1	ETP76VST71SA ⚠
T702	RTP1H3E001	POWER TRANSFORMER	1	⚠
VR901	EVQVBXFK124B	V.R.	1	
X151	RSXC4M33S02T	OSCILLATOR	1	H0H433400001
X901	EF0EC6004T4	OSCILLATOR	1	EFOEC6004T4
X902	RSXD32K7S02	OSCILLATOR	1	H0A327200027
Z120	RAN0005EM-2	TUNER UNIT	1	
Z701	ENC471D5ATRB	ZNR	1	J0LG00000006 ⚠
Z901	B3RAD0000028	REMOTE SENSOR	1	

17 Cabinet Parts Location

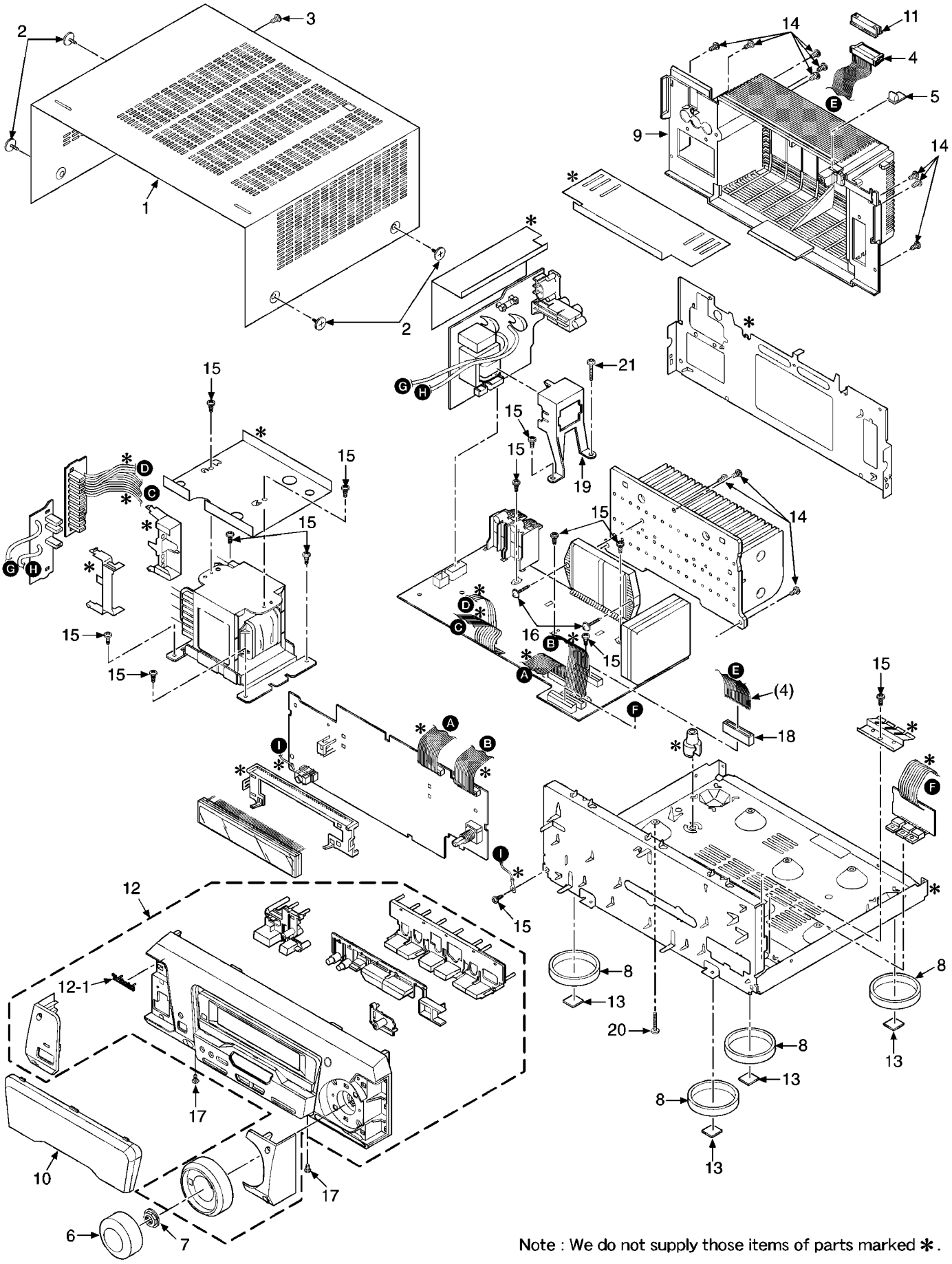

Note : We do not supply those items of parts marked ✻.
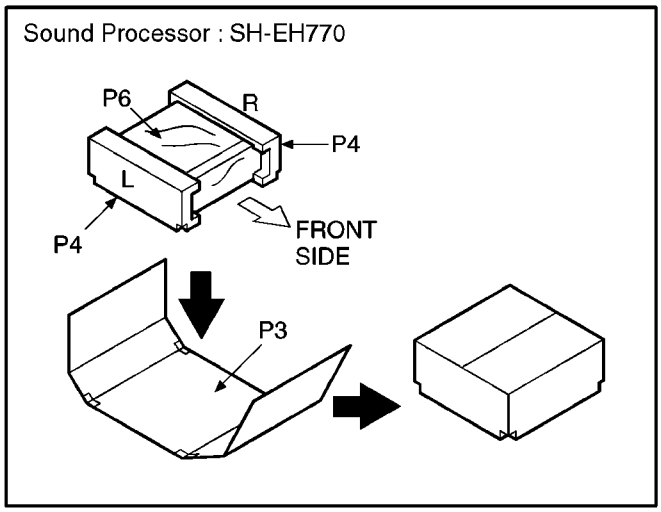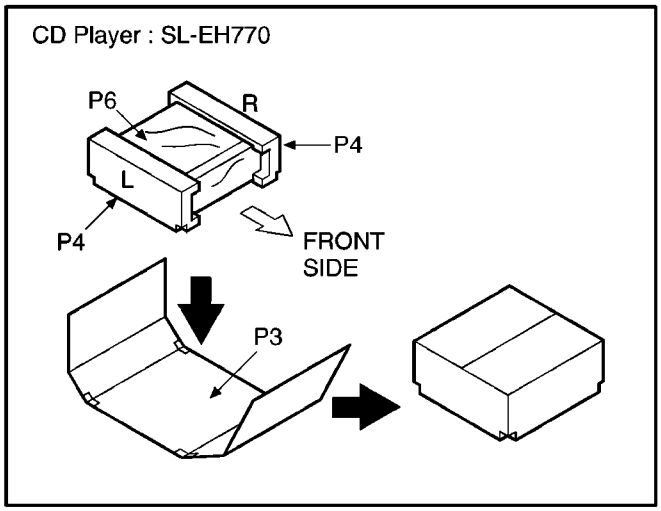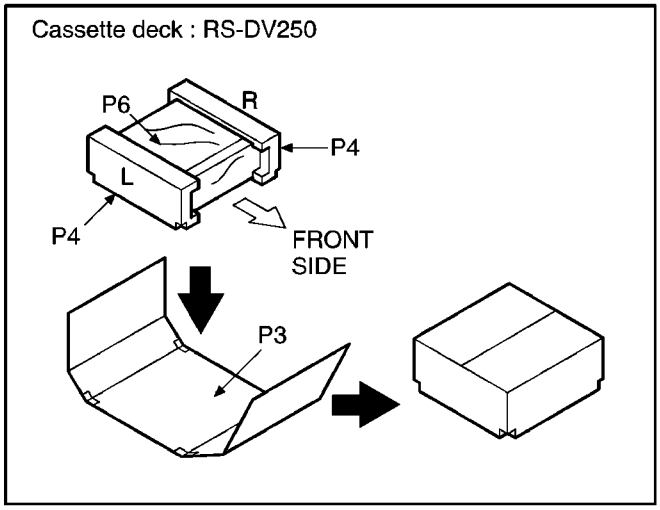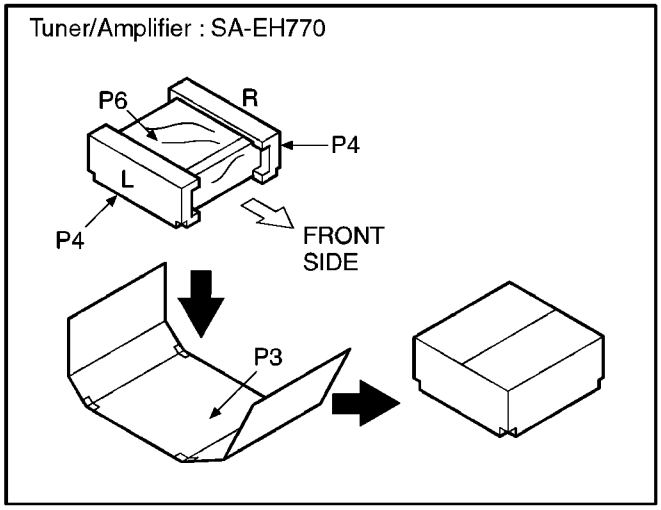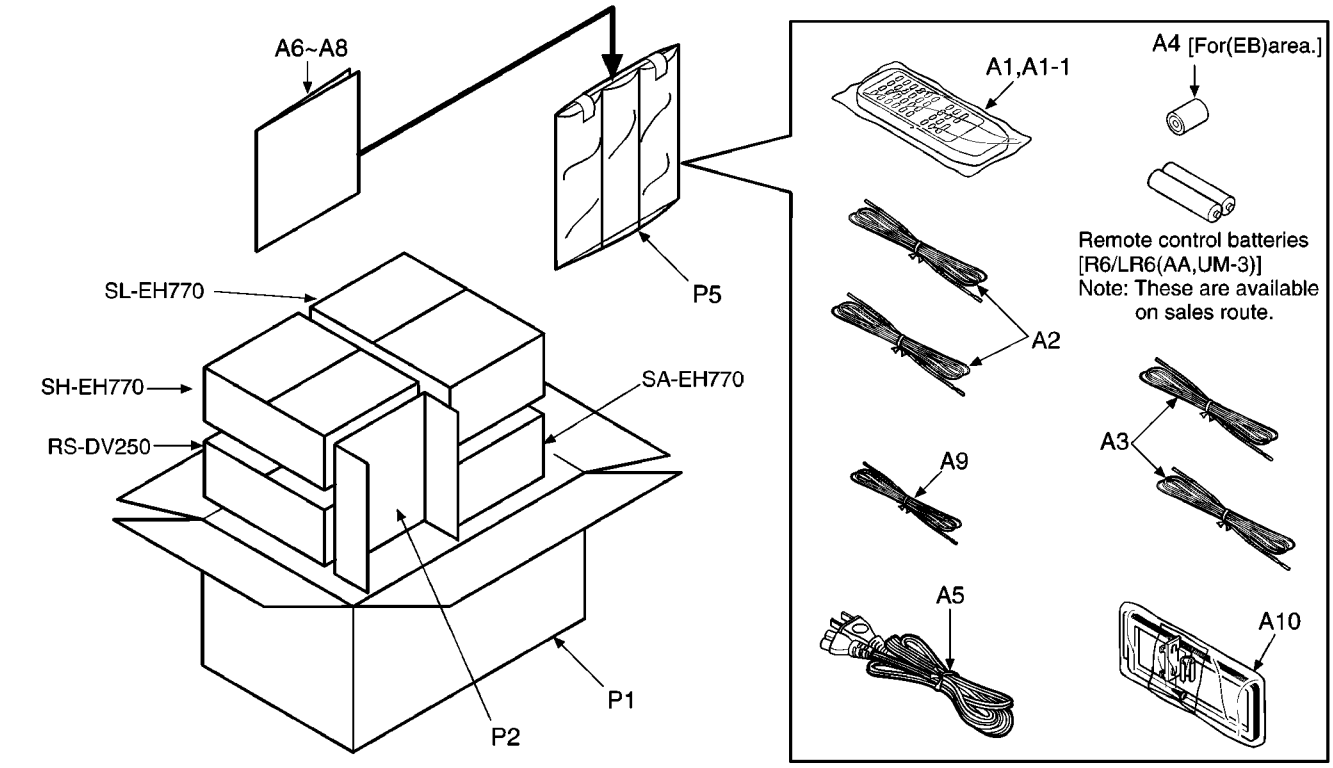
18 Packaging